TABLE OF CONTENTS

Section 00

Precautions

CONTENTS

Precautions

Precautions

General Precautions

CENDK1110000001

The WARNING, CAUTION and NOTICE messages below describe some general precautions that you should observe when servicing the outboard motor. These general precautions apply to many of the service procedures, but they will not necessarily be repeated for every procedure to which they apply.

⚠ WARNING

Failure to take proper precautions when servicing the outboard motor can cause severe personal injury.

- **To avoid eye injury, always wear protective glasses when filing metals, working on a grinder, or doing other work, which could cause debris.**
- **When two or more persons work together, pay attention to the safety of each other.**
- **When it is necessary to run the outboard motor indoors, make sure that exhaust gas is vented outdoors.**
- **When testing an outboard motor in the water, ensure that the necessary safety equipment is on board.**
  Such equipment includes: flotation aids for each person, fire extinguisher, distress signals, anchor, paddles, bilge pump, first aid kit, emergency starter rope, etc.
- **Whenever handling toxic or flammable materials, wear safety glasses to protect your eyes. Any toxic or flammable materials getting into your eye may cause inflammation. Also wear moisture-proof gloves to protect your skin.**
- **Do not swallow any toxic or flammable materials. Swallowing them could cause diarrhea, nausea or other health problems. Be especially careful not to allow children and pets to swallow these materials.**
- **Keep all toxic or flammable materials out of reach of children and pets.**
- **When working with toxic or flammable materials, make sure that the area you work in is well ventilated and that you follow all of the material manufacturer's instructions.**
- **Never use gasoline as a cleaning solvent.**
- **To avoid getting burned, do not touch the engine, engine oil or exhaust system during or shortly after engine operation.**
- **Avoid contact with new and used oil. Prolonged contact with used oil has been shown to cause skin cancer in laboratory animals. Brief contact with used oil may irritate the skin. Keep new and used oil away from children and pets. To minimize your exposure to oil, wear a long sleeve shirt and moisture - proof gloves (such as latex gloves) when changing oil. If oil contacts your skin, wash thoroughly with soap and water. Launder any clothing or rags if wet with oil. Recycle or properly dispose of used oil.**
- **Never disconnect any of the fuel lines between the fuel pump and injectors without first releasing the fuel pressure, or fuel can be sprayed out under pressure.**
- **After servicing the fuel, lubrication, cooling and/or the exhaust system, check all lines and fittings related to the system for leaks.**
- **Carefully adhere to the battery handling instructions laid out by the battery supplier.**

NOTICE

Failure to take proper precautions when servicing the outboard motor can cause damage to the parts or the outboard motor.
To prevent the parts or the outboard motor from damage, be sure to take the following precautions:

- **When removing parts that are to be reused, keep them arranged in an orderly manner so that they may be reinstalled in the proper order and orientation.**
- **Be sure to use special tools where instructed.**
- **Make sure that all parts used in assembly are clean and also lubricated when specified.**
- **When use of a certain type of lubricant, bond, or sealant is specified, be sure to use the specified type.**
- **When removing the battery, disconnect the negative cable first and then the positive cable. When reconnecting the battery, connect the positive cable first and then the negative cable.**
- **When performing service to electrical parts, if the service procedures do not require using battery power, disconnect the negative cable at the battery.**
- **Do not expose connectors and electrical parts to water, which will cause electrical systems problems.**
- **Always be careful not to drop electrical components (ECM, relays, etc.) or handle them in a rough manner.**
- **Whenever you remove oil seals, gaskets, packing, O-rings, locking washers, locking nuts, cotter pins, circlips, and certain other parts as specified, always replace them with new ones. Also, before installing these new parts, be sure to remove any left over material from the mating surfaces.**
- **Never reuse a circlip. When installing a new circlip, take care not to expand the end gap larger than required to slip the circlip over the shaft. After installing a circlip, always ensure that it is completely seated in its groove and securely fitted.**
- **Use a torque wrench to tighten fasteners to the torque values when specified.**
- **Remove grease or oil from screw / bolt threads unless a lubricant is specified.**
- **After assembly, check parts for tightness and proper operation.**

NOTE

- **To protect the environment, do not unlawfully dispose of used motor oil, other fluids or batteries.**
- **To protect the Earth's natural resources, properly dispose of used motor parts.**

Replacement Parts

NOTICE

Use of replacement parts which are not equivalent in quality to genuine SUZUKI parts can lead to performance problems and damage.
Use only genuine SUZUKI replacement parts or their equivalent. Genuine SUZUKI parts are high quality parts which are designed and built specially for SUZUKI outboard motors.

If parts replacement is necessary, Suzuki strongly recommends that you use genuine Suzuki parts or their equivalent. They are precision-made to ensure high quality and correct fit.

Section 0

General Information

0

CONTENTS

General Information

General Description

Symbols

CENDK1110101001

Listed in the table below are the symbols indicating instructions and other important information necessary for proper servicing.
Please note the definition for each symbol. You will find these symbols used throughout this manual.
Refer back to this table if you are not sure of any symbol (s) meanings.

Symbol	Definition
	Torque control required. Data beside it indicates specified torque.
	Apply oil. Use engine oil unless otherwise specified.
	Apply molybdenum oil solution. (Mixture of engine oil and SUZUKI MOLY PASTE in a ratio of 1 : 1)
	Apply SUZUKI Outboard Motor Gear Oil.
	Apply SUZUKI Super Grease A.
	Apply SUZUKI Moly Paste. 99000-25140
	Apply SUZUKI Water Resistant Grease.
	Apply SUZUKI Bond 1207B.
	Apply SUZUKI Silicone Seal.
	Apply SUZUKI Thread Lock 1342.
	Apply SUZUKI Thread Lock Super 1333B.
	Use special tool.
	Do not reuse.
	Note on reassembly.
	Use peak voltmeter Stevens CD-77.

Abbreviations

CENDK1110101002

Abbreviations used in this service manual are as follows:

A:
ATDC: After Top Dead Center
AC: Alternating Current
B:
BTDC: Before Top Dead Center
C:
CKP Sensor: Crankshaft Position sensor
CMP Sensor: Camshaft Position sensor
CTP: Close Throttle Position
D:
DC: Direct Current
DOHC: Double Over Head Camshaft
E:
ECM: Engine Control Module
EX (Ex.): Exhaust
F:
FP: Fuel Pump
G:
GND: Ground
I:
IAC: Idle Air Control
IAT: Intake Air Temperature
IG: Ignition
Ign.: Ignition
IN (In.): Intake
L:
LPS: Lever Position Sensor
M:
MAP: Manifold Absolute Pressure
P:
PCV: Positive Crankcase Ventilation
PORT: Port
PTT: Power Trim and Tilt
S:
SPS: Shift Position Sensor
STBD: Starboard
SIGP: Start-In-Gear Protection
T:
TPS: Throttle Position Sensor

Wire Color Symbols

CENDK1110101003

There are two kinds of colored wire used in this product.
One is single colored wire and the other is dual colored (striped) wire.
The single colored wire uses only one color symbol. example: B (Black).
The dual colored wire uses two color symbols. example: Bl/B.
The first symbol represents the base color of the wire and the second symbol represents the color of the stripe.
Example: Bl/B (Blue with Black stripe).

Symbol	Wire color	Symbol	Wire color
B	Black	Lg	Light green
Bl	Blue	O	Orange
Br	Brown	P	Pink
Dg	Dark green	R	Red
G	Green	V	Violet
Gr	Gray	W	White
Lbl	Light blue	Y	Yellow

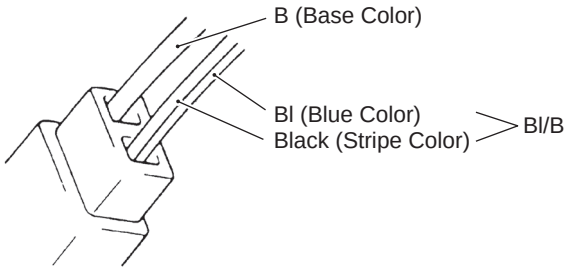

IAJ311010009-01

Warning, Caution and Information Label Locations

CENDK1110101004

The figure shows main labels among others that are attached to outboard motor.
When servicing outboard motor, refer to WARNING / CAUTION instructions printed on labels.
If any WARNING / CAUTION label is found stained or damage, clean or replace it as necessary.
Do not reuse a label after it has been removed. Always use new label.

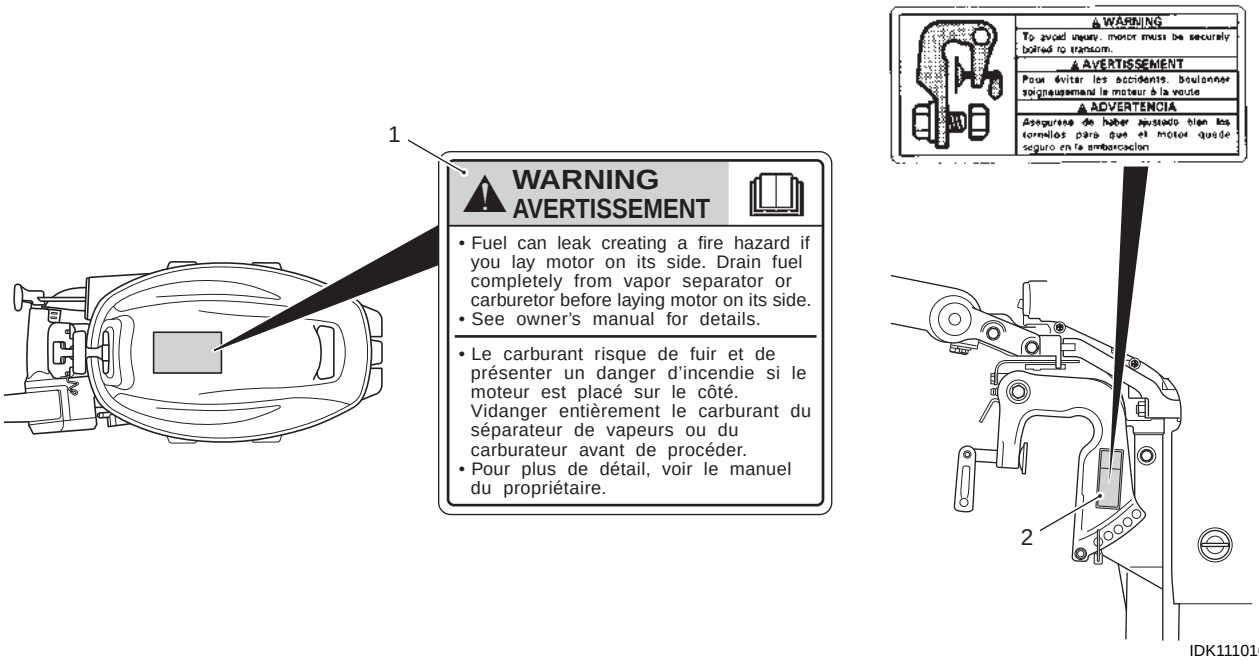

IDK111010005-01

1. Label, engine cover	2. Label, clamp bracket

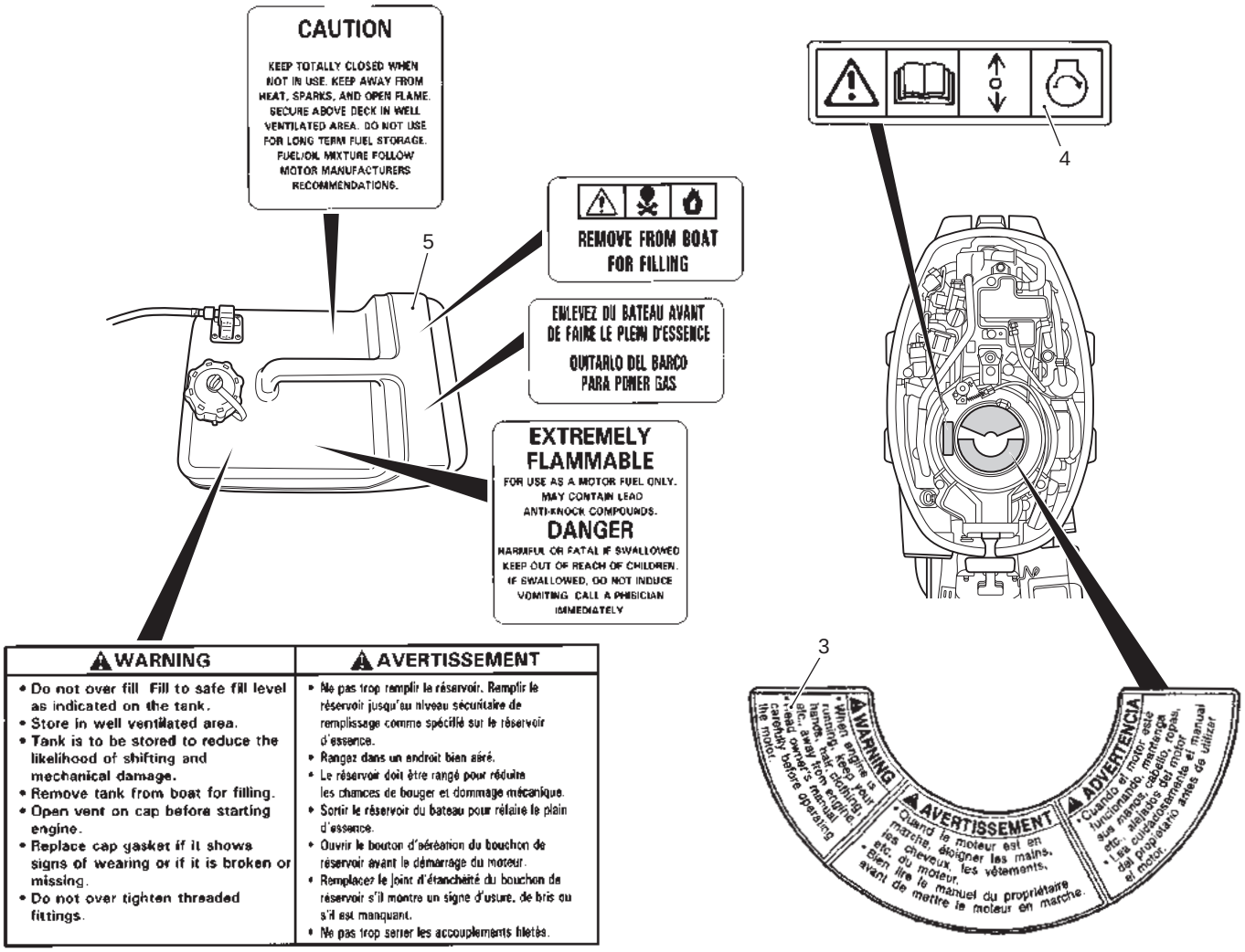

IDK111010006-01

3. Label, mag cover	4. Label, S.I.G.P	5. Fuel tank

Outboard Motor Identification Number Location

CENDK1110101006

Model, Pre-fix, Serial Number

The Model, Pre-fix and Serial number of motor are stamped on a plate attached to the clamp bracket.

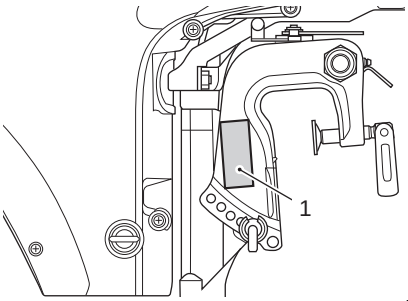

IDK111010007-01

1. Identification number plate	

Example

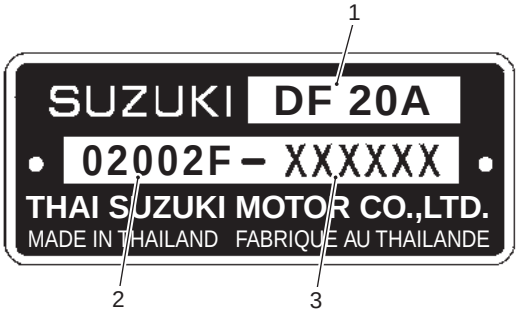

IDK111010001-01

1. Model	3. Serial number
2. Pre-fix	

Engine Serial Number Location

A second engine serial number plate is pressed into a boss on the cylinder block.

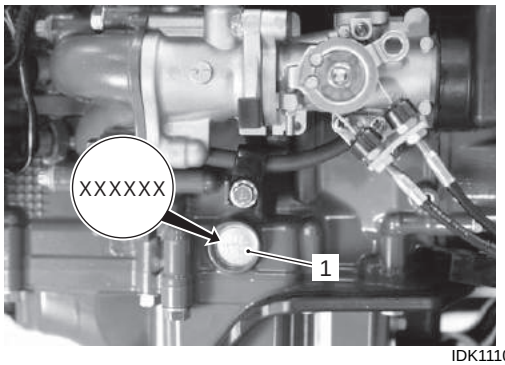

IDK111010004-01

1. Serial number plate	

Fuel and Oil Recommendations

CENDK1110101007

Gasoline

NOTICE

Use of leaded gasoline can cause engine damage.
Use of improper or poor quality fuel can affect performance and may damage the motor and fuel system.

Use only unleaded gasoline. Do not use fuel having lower than the recommended octane, or fuel that may be stale or contaminated by dirt/water etc.

Suzuki highly recommends that you use alcohol-free unleaded gasoline with a minimum pump octane rating of 87 (R/2+M/2 method) or 91 (Research method). However, blends of unleaded gasoline and alcohol with equivalent octane content may be used.

Allowable maximum blend of a single additive (not combination)
5% Methanol, 10% Ethanol, 15% MTBE

Engine Oil

NOTICE

Use of a poor quality engine oil can adversely affect engine performance and life.

Suzuki recommends that you use Suzuki Marine 4-Cycle Engine Oil or its equivalent.

Oil quality is a major contributor to your engine's performance and life. Always select good quality engine oil.
Suzuki recommends the use of SAE 10W-40 SUZUKI MARINE 4-CYCLE ENGINE OIL.
If SUZUKI MARINE 4-CYCLE ENGINE OIL is not available, select a NMMA certified FC-W oil or good quality 4-cycle motor oil from the following chart according to the average temperatures in your area.

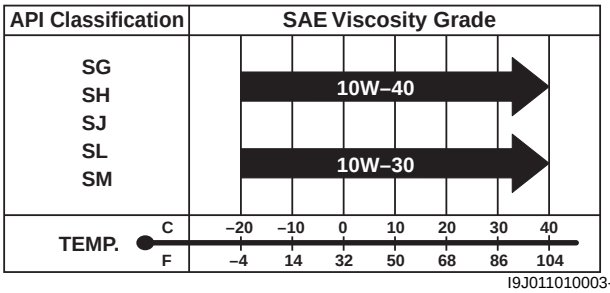

I9J011010003-02

Gear Oil

Suzuki recommends the use of SUZUKI Outboard Motor Gear Oil. If it is not available, use SAE 90 hypoid gear oil which is rated GL-5 under the API classification system.

Break-In Procedures

CENDK1110101008

NOTICE

Failure to follow the break-in procedures described below can result in severe engine damage.

Be sure to follow the engine break-in procedures described below.

The first 10 hours are critically important to ensure correct running of either a brand new motor or a motor that has been reconditioned or rebuilt. How the motor is operated during this time will have direct bearing on its life span and long-term durability.

Break-in period
10 hours

Warm-Up Recommendation

NOTICE

Running at high speed without sufficient warm-up may cause severe engine damage such as piston seizure.

Always allow sufficient idling time (5 minutes) for the engine to warm-up before running at high speed.

Allow sufficient idling time (more than 5 minutes) for the engine to warm up after cold engine starting.

Throttle Recommendation

NOTE

Avoid maintaining a constant engine speed for an extended period at any time during the engine break-in period by varying the throttle position occasionally.

First 2 hours
For the first 15 minutes, operate the engine in-gear at idling speed. During the remaining 1 hour and 45 minutes, operate the engine in-gear at less than 1/2 (half) throttle (3 000 r/min).

NOTE

The throttle may be briefly opened beyond the recommended setting to plane the boat, but must be reduced to the recommended setting immediately after planning.

Next 1 hour
Operate the engine in-gear at less than 3/4 (three - quarter) throttle (4 000 r/min).

Last 7 hours
Operate the engine in-gear at a desired engine speed. However, do not operate continuously at full throttle for more than 5 minutes.

NOTICE

Running continuously at full throttle for more than 5 minutes at a time during the last 7 hours of break-in operation may cause severe engine damage such as seizure.

During the last 7 hours of break-in operation, do not operate at wide open throttle for more than 5 minutes at a time.

Propeller Selection Guide

CENDK1110101009

An outboard motor is designed to develop its rated power within a specified engine speed range. The maximum rated power delivered by the DF15A / 20A models are shown below.

Recommended full throttle speed range

DF15A	5 000 – 6 000 r/min
DF20A	5 300 – 6 300 r/min

NOTICE

Installing a propeller with either too much or too little pitch will cause incorrect maximum engine speed, which may result in severe damage to the motor.

Select a propeller that will allow the engine to reach the recommended operating range at full throttle with the maximum boat load.

If the standard propeller fails to meet the above requirement, use another pitch propeller to hold the engine speed within the range specified above.

Propeller size chart

Blade x Dia. (in.) x Pitch (in.)
3 x 9 and 1/4 x 7
3 x 9 and 1/4 x 8
3 x 9 and 1/4 x 9
3 x 9 and 1/4 x 10
3 x 9 and 1/4 x 11

Battery Requirement

CENDK1110101010

Suzuki recommends a 12 volt cranking type lead acid battery for the DF15A/20A.
Minimum battery requirement for starting the engine is provided below.
The battery must satisfy one of the specifications described below.

NOTE

- **The specifications listed below are the minimum battery rating requirements for starting the engine.**
- **Additional electrical loads from the boat will require larger capacity batteries.**
- **Dual-purpose (Cranking / Deep Cycle) batteries can be used if they meet the minimum specifications listed below (MCA, CCA, or RC).**
- **Do not use a Deep Cycle battery for the main cranking battery.**
- **The use of Maintenance-Free, sealed, or Gel-Cell batteries is not recommended because they may not be compatible with Suzuki's charging system.**
- **When connecting batteries in parallel, they must be of the same type, capacity, manufacturer, and of similar age. When replacement is necessary, they should be replaced as a set.**
- **It is recommended that the battery be installed in an enclosed case.**
- **When connecting batteries, hexagon nuts must be used to secure battery leads to battery terminals.**

Battery specification

450 Marine Cranking Amps (MCA)/ABYC, or 330 Cold Cranking Amps (CCA)/SAE or 70 Reserve Capacity (RC) Minutes/SAE or 12 V 35 AH

Specifications

Specifications

CENDK1110107001

NOTE

These specifications are subject to change without notice.

Model Pre-fix

Item	Unit	Data			
		DF15A	DF15AE	DF20A	DF20AE
PRE-FIX		01504F		02002F	

Dimensions and Weight

Item		Unit	Data			
			DF15A	DF15AE	DF20A	DF20AE
Overall length (front to back)		mm (in.)	662 (26.1)			
Overall width (side to side)		mm (in.)	336 (13.2)			
Overall height	S	mm (in.)	1 093 (43.0)			
	L	mm (in.)	1 220 (48.0)			
Weight (without engine oil)	S	kg (lbs)	44 (97)	48 (106)	44 (97)	48 (106)
	L	kg (lbs)	45 (99)	49 (108)	45 (99)	49 (108)
Transom height	S	mm (in. type)	422 (15)			
	L	mm (in. type)	549 (20)			

Performance

Item	Unit	Data			
		DF15A	DF15AE	DF20A	DF20AE
Maximum output	kW (PS)	11.0 (15)		14.7 (20)	
Recommended operating range	r/min	5 000 – 6 000		5 300 – 6 300	
Idle speed	r/min	850 ± 50 (in-gear: Approx. 800 – 900)			

Powerhead

Item	Unit	Data			
		DF15A	DF15AE	DF20A	DF20AE
Engine type		4-stroke SOHC			
Number of cylinders		2			
Bore	mm (in.)	60.4 (2.38)			
Stroke	mm (in.)	57.0 (2.24)			
Total displacement	cm^3 (cu. in)	327 (19.9)			
Compression ratio	: 1	10.5			
Spark plug	NGK	CPR6EA-9			
Ignition system		Digital CDI			
Fuel supply system		Electronic fuel injection			
Exhaust system		Through prop exhaust			
Cooling system		Water cooled			
Lubrication system		Wet sump by trochoid pump			
Starting system		Manual	Electric	Manual	Electric
Throttle control		Twist grip		Twist grip	
Choke system		—			

Fuel and Oil

Item	Unit	Data			
		DF15A	DF15AE	DF20A	DF20AE
Fuel		Suzuki highly recommends the use of alcohol-free unleaded gasoline with a minimum pump octane rating of 87 (R/2 + M/2 method) or 91 (Research method). However, blends of unleaded gasoline and alcohol with equivalent octane content may be used.			
Engine oil		• API classification: SG, SH, SJ, SL, SM or NMMA FC-W classification: SG, SH, SJ, SL, SM • Viscosity rating: SAE 10W-40 or NMMA FC-W 10W-40			
Engine oil amounts	L (US/Imp. qt)	1.0 (1.1 / 0.9): Oil change only 1.1 (1.2 / 1.0): Oil filter change			
Gear oil		SUZUKI Outboard Motor Gear Oil or SAE 90 hypoid gear oil, API classification GL-5.			
Gearcase oil capacity	ml (US/Imp. oz)	250 (8.4/8.8)			

Bracket

Item	Unit	Data			
		DF15A	DF15AE	DF20A	DF20AE
Trim angle	degree	0 – 16 (–8 to 8)			
Number of tilt pin position		5			
Maximum tilt angle	degree	73 (–8 to 65)			

Lower Unit

Item	Unit	Data			
		DF15A	DF15AE	DF20A	DF20AE
Reversing system		Gear			
Transmission		Forward-Neutral-Reverse			
Reduction system		Bevel gear			
Gear ratio		12 : 25 (2.08)			
Drive line impact protection		Spline drive rubber hub			
Propeller shaft rotation (when shift into forward)		Clockwise			
Propeller		Blade x Dia. (in.) x Pitch (in.)			
		3 x 9 and 1/4 x 7 3 x 9 and 1/4 x 8 3 x 9 and 1/4 x 9 3 x 9 and 1/4 x 10 3 x 9 and 1/4 x 11			

Service Data

CENDK1110107002

NOTE

These service data are subject to change without notice.

Powerhead

Item	Unit	Data			
		DF15A	DF15AE	DF20A	DF20AE
Recommended operating range	r/min	5 000 – 6 000		5 300 – 6 300	
Idle speed	r/min	850 ± 50 (in-gear: Approx. 800 – 900)			
**Cylinder compression pressure	kPa (kgf/cm^2, psi.)	DF15A/AE, DF20A/AE (With decompression system): 350 – 900 (3.5 – 9, 50 – 128) {Crank with recoil starter}			
**Cylinder compression pressure max. difference between cylinders	kPa (kgf/cm^2, psi.)	100 (1.0, 14)			
**Engine oil pressure	kPa (kgf/cm^2, psi.)	200 – 500 (2.0 – 5.0, 29 – 71) at 3 000 r/min (at normal operating temp.)			
Engine oil		• API classification: SG, SH, SJ, SL, SM or NMMA FC-W classification: SG, SH, SJ, SL, SM • Viscosity rating: SAE 10W-40 or NMMA FC-W 10W-40			
Engine oil amounts	L (US/lpm. qt)	1.0 (1.1 / 0.9): Oil change only 1.1 (1.2 / 1.0): Oil filter change			
Thermostat operating temperature	°C (°F)	48 – 52 (118 – 126)			

**Figures shown are guidelines only, not absolute service limits.

Cylinder Head / Camshaft

Item			Unit	Data			
				DF15A	DF15AE	DF20A	DF20AE
Cylinder head distortion		Limit	mm (in.)	0.06 (0.002)			
Manifold seating faces distortion		Limit	mm (in.)	0.06 (0.002)			
Cam height	IN	std.	mm (in.)	23.710 – 23.870 (0.9335 – 0.9398)			
		Limit	mm (in.)	23.610 (0.9295)			
	EX	std.	mm (in.)	23.530 – 23.690 (0.9264 – 0.9327)			
		Limit	mm (in.)	23.430 (0.9224)			
Camshaft journal oil clearance	Upper	std.	mm (in.)	0.020 – 0.062 (0.0008 – 0.0024)			
		Limit	mm (in.)	0.100 (0.0039)			
	Lower	std.	mm (in.)	0.020 – 0.062 (0.0008 – 0.0024)			
		Limit	mm (in.)	0.100 (0.0039)			
Camshaft journal bore diameter	Upper	std.	mm (in.)	25.000 – 25.021 (0.9843 – 0.9851)			
	Lower	std.	mm (in.)	23.000 – 23.021 (0.9055 – 0.9063)			
Camshaft journal outside diameter	Upper	std.	mm (in.)	24.959 – 24.980 (0.9826 – 0.9835)			
	Lower	std.	mm (in.)	22.959 – 22.980 (0.9039 – 0.9047)			
Rocker arm shaft to rocker arm clearance		std.	mm (in.)	0.016 – 0.045 (0.0006 – 0.0018)			
		Limit	mm (in.)	0.060 (0.0024)			
Rocker arm inside diameter		std.	mm (in.)	13.000 – 13.018 (0.5118 – 0.5125)			
Rocker arm shaft outside diameter		std.	mm (in.)	12.973 – 12.984 (0.5107 – 0.5112)			

Valve / Valve Guide

Item			Unit	Data			
				DF15A	DF15AE	DF20A	DF20AE
Valve diameter		IN	mm (in.)	26 (1.02)			
		EX	mm (in.)	22 (0.87)			
Valve clearance (Cold engine condition)	IN	std.	mm (in.)	0.18 – 0.22 (0.007 – 0.009)			
	EX	std.	mm (in.)	0.18 – 0.22 (0.007 – 0.009)			
Valve seat angle	IN		—	15°, 45°			
	EX		—	15°, 45°			
Valve guide to valve stem clearance	IN	std.	mm (in.)	0.010 – 0.037 (0.0004 – 0.0015)			
		Limit	mm (in.)	0.070 (0.0028)			
	EX	std.	mm (in.)	0.035 – 0.062 (0.0014 – 0.0024)			
		Limit	mm (in.)	0.090 (0.0035)			
Valve guide inside diameter	IN, EX	std.	mm (in.)	5.500 – 5.512 (0.2165 – 0.2170)			
Valve guide protrusion	IN, EX	std.	mm (in.)	9.8 – 10.2 (0.39 – 0.40)			
Valve stem outside diameter	IN	std.	mm (in.)	5.475 – 5.490 (0.2156 – 0.2161)			
	EX	std.	mm (in.)	5.450 – 5.465 (0.2146 – 0.2152)			
Valve stem deflection	IN	Limit	mm (in.)	0.14 (0.006)			
	EX	Limit	mm (in.)	0.18 (0.007)			
Valve stem runout	IN, EX	Limit	mm (in.)	0.05 (0.002)			
Valve head radial runout	IN, EX	Limit	mm (in.)	0.08 (0.003)			
Valve head thickness	IN	std.	mm (in.)	—			
		Limit	mm (in.)	0.5 (0.02)			
	EX	std.	mm (in.)	—			
		Limit	mm (in.)	0.5 (0.02)			
Valve seat contact width	IN	std.	mm (in.)	0.9 – 1.1 (0.035 – 0.043)			
	EX	std.	mm (in.)	0.9 – 1.1 (0.035 – 0.043)			
Valve spring free length		std.	mm (in.)	33.16 (1.31)			
		Limit	mm (in.)	31.50 (1.24)			
Valve spring preload		std.	N (kg, lbs)	82 – 95 (8.2 – 9.5, 18 – 21) at 28.5 mm (1.12 in)			
		Limit	N (kg, lbs)	75 (7.5, 16.5) at 28.5 mm (1.12 in)			
Valve spring squareness		Limit	mm (in.)	1.0 (0.04)			

Cylinder / Piston / Piston Ring

Item			Unit	Data			
				DF15A	DF15AE	DF20A	DF20AE
Cylinder distortion		Limit	mm (in.)	0.06 (0.002)			
Piston to cylinder clearance		std.	mm (in.)	0.0271 – 0.0425 (0.0011 – 0.0017)			
		Limit	mm (in.)	0.100 (0.0039)			
Cylinder bore		std.	mm (in.)	60.400 – 60.415 (2.3780 – 2.3785)			
Cylinder measuring position			mm (in.)	50 (1.969) from cylinder top surface			
Piston skirt diameter		std.	mm (in.)	60.365 – 60.380 (2.3766 – 2.3772)			
Piston measuring position			mm (in.)	9 (0.354) from piston skirt end			
Cylinder bore wear		Limit	mm (in.)	0.10 (0.0039)			
Piston ring end gap	1st	std.	mm (in.)	0.12 – 0.25 (0.0047 – 0.0098)			
		Limit	mm (in.)	0.70 (0.028)			
	2nd	std.	mm (in.)	0.26 – 0.39 (0.0102 – 0.0154)			
		Limit	mm (in.)	0.70 (0.028)			
Piston ring free end gap	1st	std.	mm (in.)	Approx. 6.3 (0.2480)			
		Limit	mm (in.)	5.0 (0.1969)			
	2nd	std.	mm (in.)	Approx. 5.6 (0.2205)			
		Limit	mm (in.)	4.5 (0.1772)			
Piston ring to groove clearance	1st	std.	mm (in.)	0.030 – 0.070 (0.0012 – 0.0028)			
		Limit	mm (in.)	0.12 (0.005)			
	2nd	std.	mm (in.)	0.020 – 0.060 (0.0008 – 0.0024)			
		Limit	mm (in.)	0.10 (0.004)			
Piston ring groove width	1st	std.	mm (in.)	1.02 – 1.04 (0.040 – 0.041)			
	2nd	std.	mm (in.)	1.21 – 1.23 (0.048 – 0.048)			
	Oil	std.	mm (in.)	2.01 – 2.03 (0.079 – 0.080)			
Piston ring thickness	1st	std.	mm (in.)	0.97 – 0.99 (0.038 – 0.039)			
	2nd	std.	mm (in.)	1.17 – 1.19 (0.046 – 0.047)			
Pin clearance in piston pin hole		std.	mm (in.)	0.002 – 0.013 (0.0001 – 0.0005)			
		Limit	mm (in.)	0.05 (0.0020)			
Piston pin outside diameter		std.	mm (in.)	15.995 – 16.000 (0.6297 – 0.6299)			
		Limit	mm (in.)	15.980 (0.6291)			
Piston pin hole diameter		std.	mm (in.)	16.002 – 16.008 (0.6300 – 0.6302)			
		Limit	mm (in.)	16.030 (0.6311)			
Pin clearance in conrod small end		std.	mm (in.)	0.006 – 0.019 (0.0002 – 0.0007)			
		Limit	mm (in.)	0.050 (0.0020)			
Conrod small end bore		std.	mm (in.)	16.006 – 16.014 (0.6302 – 0.6304)			

Crankshaft / Conrod

Item		Unit	Data			
			DF15A	DF15AE	DF20A	DF20AE
Conrod small end inside diameter	std.	mm (in.)	16.006 – 16.014 (0.6302 – 0.6304)			
Conrod big end oil clearance	std.	mm (in.)	0.025 – 0.045 (0.0010 – 0.0018)			
	Limit	mm (in.)	0.080 (0.0031)			
Conrod big end inside diameter	std.	mm (in.)	29.025 – 29.034 (1.1427 – 1.1431)			
Crank pin outside diameter	std.	mm (in.)	28.989 – 29.000 (1.1413 – 1.1417)			
Crank pin outside diameter difference (out-of-round and taper)	Limit	mm (in.)	0.010 (0.0004)			
Conrod big end side clearance	std.	mm (in.)	0.100 – 0.250 (0.0039 – 0.0098)			
	Limit	mm (in.)	0.350 (0.0138)			
Conrod big end width	std.	mm (in.)	19.950 – 20.000 (0.7854 – 0.7874)			
Crank pin width	std.	mm (in.)	20.10 – 20.20 (0.7913 – 0.7953)			
Crankshaft journal runout	Limit	mm (in.)	0.04 (0.0016)			
Crankshaft journal oil clearance	std.	mm (in.)	0.020 – 0.047 (0.0008 – 0.0019)			
	Limit	mm (in.)	0.080 (0.0031)			
Crankcase bearing holder inside diameter	std.	mm (in.)	35.000 – 35.008 (1.3780 – 1.3783)			
Crankshaft journal outside diameter	std.	mm (in.)	31.989 – 32.000 (1.2594 – 1.2598)			
Crankshaft journal outside diameter difference (out-of-round and taper)	Limit	mm (in.)	0.010 (0.0004)			

Item		Unit	Data			
			DF15A	DF15AE	DF20A	DF20AE
Crankshaft bearing thickness	std.	mm (in.)	1.486 – 1.490 (0.0585 – 0.0587)			
Crankshaft thrust play	std.	mm (in.)	0.10 – 0.30 (0.004 – 0.012)			
	Limit	mm (in.)	0.60 (0.024)			
Crankshaft length	std.	mm (in.)	126.8 – 126.9 (4.992 – 4.996)			
Crankcase length	std.	mm (in.)	127.0 – 127.1 (5.000 – 5.004)			

Electrical

Item		Unit	Data			
			DF15A	DF15AE	DF20A	DF20AE
Ignition timing		Degrees at r/min	5° BTDC – 10° BTDC		5° BTDC – 20° BTDC	
Over revolution limiter		r/min	6 200		6 300	
CKP sensor resistance		Ω at 20 °C	148 – 222 (R/B – B)			
Power source coil resistance		Ω at 20 °C	2.1 – 3.2 (W – B): Manual start model			
Ignition coil resistance	Primary	Ω at 20 °C	0.08 – 0.11 (O – B)			
	Secondary	kΩ at 20 °C	3.5 – 4.7 (H·T cord – H·T cord)			
Spark plug cap resistance		kΩ at 20 °C	4 – 6			
Battery charge coil resistance		Ω at 20 °C	0.5 – 0.8: Manual start model 0.7 – 1.1: Electric start model			
Battery charge coil output (12 V)		Watt	72: Manual start model 144: Electric start model			
Standard spark plug	Type	NGK	CPR6EA-9			
	Gap	mm (in.)	0.8 – 0.9 (0.031 – 0.035)			
Fuse amp. rating		A	Electric starter model 30A: Main 10A: ECM			
Recommended battery capacity (12 V)		Ah (kC)	35 (126) or larger			
Fuel injector resistance		Ω at 20 °C	10 – 14			
IAC valve resistance		Ω at 20 °C	31 – 42			
IAT sensor / Cylinder temp. sensor (Thermistor characteristic)		kΩ at 25 °C	1.8 – 2.3			
Starter motor relay coil resistance		Ω at 20 °C	145 – 190: Electric start model			

Starter Motor (Only for Electric Start Model)

Item		Unit	Data			
			DF15A	DF15AE	DF20A	DF20AE
Max. continuous time of use		Sec.	30			
Motor output		kW	1.4			
Brush length	std.	mm (in.)	16.0 (0.63)			
	Limit	mm (in.)	12.0 (0.47)			
Commutator undercut	std.	mm (in.)	0.5 – 0.8 (0.02 – 0.03)			
	Limit	mm (in.)	0.2 (0.01)			
Commutator outside diameter	std.	mm (in.)	29.0 (1.14)			
	Limit	mm (in.)	28.0 (1.10)			

Peak Voltage

NOTE

Requirement for peak voltage measurement:

- **Remove all spark plugs to eliminate the variables at cranking speed.**
- **Use a STEVENS peak voltage tester, model CD-77.**
- **Use the 26-pin test cord.**
- **Crank with recoil starter or starter motor.**

Electric starter model

Testing sequence		Tester probe		Peak voltage	Tester range	Remarks
		(+) [Red]	(–) [Black]			
1	Ignition coil primary output	Orange	GND	110 V or over	NEG 500	• With ignition coil connected. • Use the 26 pin test cord.
2	CKP sensor output	Red/Black (Harness No.26 terminal)	GND	1.0 V or over	SEN 5	• With ECM connector disconnected.
3	Fuel Injector signal No.1	Orange/ Black	GND	20 V or over	POS 50	• With fuel injector connected. • Use the 26 pin test cord.
4	Fuel Injector signal No.2	Black/ Brown	GND	20 V or over	POS 50	
5	DC power for ECM	White	GND	8 V or over	POS 50	• With rectifier connected. • Use the 26 pin test cord.

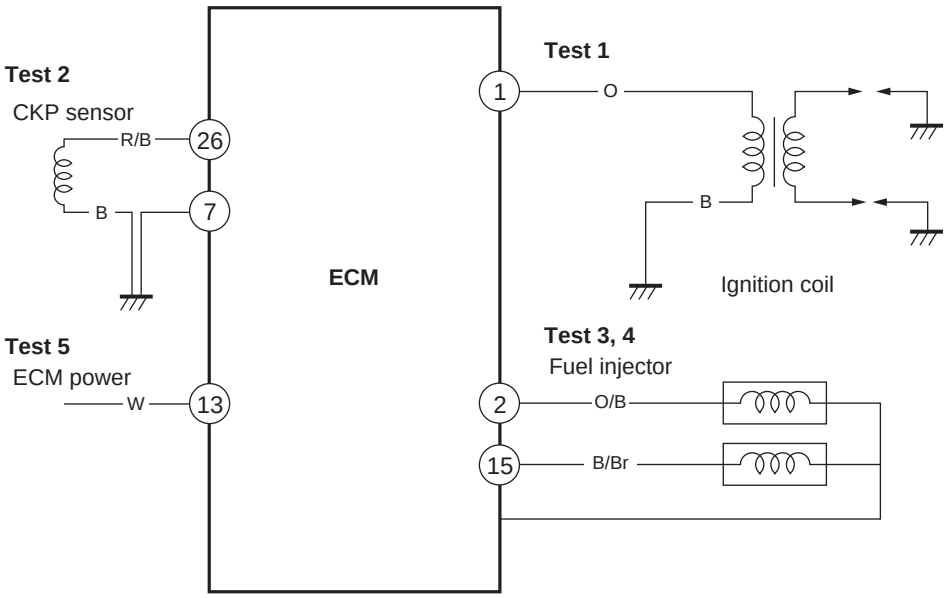

IDK111010002-01

Manual starter model

Testing sequence		Tester probe (+) [Red]	Tester probe (–) [Black]	Peak voltage	Tester range	Remarks
1	Ignition coil primary output	Orange	GND	100 V or over	NEG 500	• With ignition coil connected. • Use the 26 pin test cord.
2	CKP sensor output	Red/Black (Harness No.26 terminal)	GND	1.0 V or over	SEN 5	• With ECM connector disconnected.
3	Power source coil output	Brown/Red (Harness No.13 terminal)	Brown/ White (Harness No.11 terminal)	16 V or over	POS 50	• With ECM connector disconnected.
4	Fuel Injector signal No.1	Orange/ Black	GND	20 V or over	POS 50	• With fuel injector connected. • Use the 26 pin test cord.
5	Fuel Injector signal No.2	Black/ Brown	GND	20 V or over	POS 50	

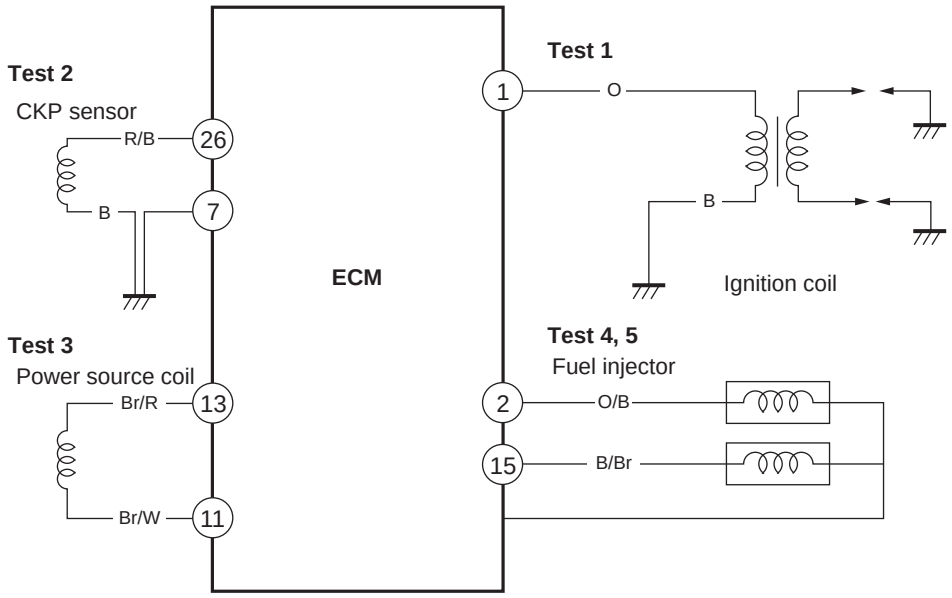

IDK111010003-01

Self-Diagnostic code

0: OFF, 1: ON

Priority	Failed item	Code	Lamp flashing pattern	Fail-Safe system active
1	MAP sensor 1	3 – 4	 MCODE00D34-0-01	Yes
2	Cylinder temp. sensor	1 – 4	 MCODE00D14-0-01	Yes
3	IAT sensor	2 – 3	 MCODE00D23-0-01	Yes
4	CKP sensor	4 – 2	 MCODE00D42-0-01	No
5	CMP sensor	2 – 4	 MCODE00D24-0-01	No
6	Air intake system	2 – 2	 MCODE00D22-0-01	Yes
7	MAP sensor 2	3 – 2	 MCODE00D32-0-01	No
8	Fuel injector	4 – 3	 MCODE00D43-0-01	No
9	Throttle position sensor	2 – 1	 MCODE00D21-0-01	Yes
10	Rectifier / Regulator (Over-charging)	1 – 1	 MCODE00D11-0-01	No
11	Oil pressure switch (R model)	5 – 3	 MCODE00D53-0-01	No

Tightening Torque Specifications

CENDK1110107003

NOTICE

Failure to use the correct fasteners or to properly use fasteners can cause parts or system damage.

- **When fasteners are removed, always reinstall them at the locations from which they were removed.**
- **All fasteners must be replaced with fasteners having the same part number.**
  If a fastener of the correct part number is not available, a fastener of the same size having equal or higher strength may be used.

Important Fasteners

Item	Thread diameter	Tightening torque		
		N·m	kgf-m	lbf-ft
Cylinder head cover bolt	6 mm	10	1.0	7.2
Cylinder head bolt	8 mm	30	3.0	21.7
Crankcase bolt	6 mm	10	1.0	7.2
	8 mm	25	2.5	18.0
Conrod cap bolt	6 mm	10	1.0	7.2
Oil pump screw	6 mm	8.5	0.9	6.5
Intake manifold bolt	8 mm	23	2.3	16.5
Throttle body mounting bolt	6 mm	11	1.1	8.0
Fuel pump bolt	6 mm	10	1.0	7.2
Oil pressure switch	—	13	1.3	9.5
Valve adjusting lock nut	5 mm	11	1.1	8.0
Timing pulley nut	27 mm	50	5.0	36.0
Oil regulator	14 mm	27	2.7	19.5
Camshaft pulley bolt	6 mm	10	1.0	7.2
Thermostat cover bolt	6 mm	10	1.0	7.2
Flywheel nut	14 mm	90	9.0	65
Starter motor mounting bolt	8 mm	23	2.3	16.5
Engine oil drain plug	12 mm	13	1.3	9.5
Power unit mounting bolt	8 mm	23	2.3	16.5
Driveshaft housing bolt	8 mm	23	2.3	16.5
Upper mount nut	10 mm	35	3.5	25.0
Lower mount cover bolt	8 mm	23	2.3	16.5
Shallow drive arm bolt	10 mm	25	2.5	18.0
Tiller handle cover bolt	8 mm	23	2.3	16.5
Clamp bracket shaft nut	7/8-14 UNF	43	4.3	31.0
Water pump case nut	6 mm	6	0.6	4.3
Gearcase bolt	8 mm	17	1.7	12.3
Propeller shaft bearing housing bolt	6 mm	8	0.8	5.8
Propeller nut	12 mm	18	1.8	13.0

General Bolt

NOTE

These value are only applicable when torque for a general bolt is not listed in the “Important Fasteners” table.

Type of bolt	Thread diameter	Tightening torque		
		N·m	kgf-m	lbf-ft
 I9J011010014-01 **(Conventional or “4” marked bolt)**	5 mm	2 – 4	0.2 – 0.4	1.5 – 3.0
	6 mm	4 – 7	0.4 – 0.7	3.5 – 5.0
	8 mm	10 – 16	1.0 – 1.6	7.0 – 11.5
	10 mm	22 – 35	2.2 – 3.5	16.0 – 25.5
 I9J011010015-01 **(Stainless steel bolt)**	5 mm	2 – 4	0.2 – 0.4	1.5 – 3.0
	6 mm	6 – 10	0.6 – 1.0	4.5 – 7.0
	8 mm	15 – 20	1.5 – 2.0	11.0 – 14.5
	10 mm	34 – 41	3.4 – 4.1	24.5 – 29.5
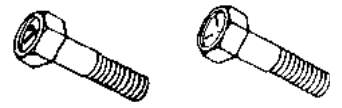 I9J011010016-01 **(“7” marked bolt)**	5 mm	3 – 6	0.3 – 0.6	2.0 – 4.5
	6 mm	8 – 12	0.8 – 1.2	6.0 – 8.5
	8 mm	18 – 28	1.8 – 2.8	13.0 – 20.0
	10 mm	40 – 60	4.0 – 6.0	29.0 – 43.5

Special Tools and Equipment

Recommended Service Material

CENDK1110108001

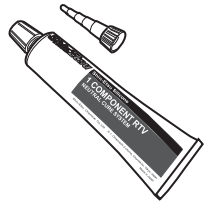 **93691–80030** SUZUKI Silicone Seal (100 g)	 **99000–22B22** SUZUKI Outboard Motor Gear Oil	 **99000–25350** SUZUKI Water Resistant Grease EP2 (250 g)	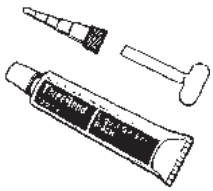 **99000–31140** SUZUKI Bond 1207B (100 g)	 **99000–32050** SUZUKI Thread Lock 1342 (50 g)

Special Tool

CENDK1110108002

 **01500–08403** Bolt	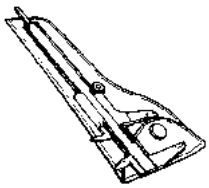 **09900–20101** Vernier calipers (150 mm)	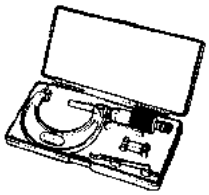 **09900–20202** Micrometer (25 – 50 mm)	 **09900–20203** Micrometer (50 – 75 mm)	 **09900–20205** Micrometer (0 – 25 mm)
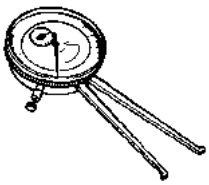 **09900–20605** Dial calipers (10 – 34 mm)	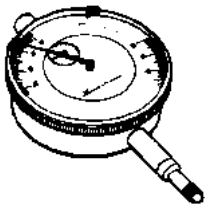 **09900–20606** Dial gauge	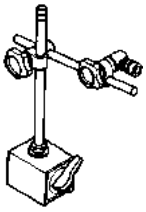 **09900–20701** Magnetic stand	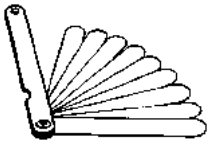 **09900–20803** Thickness gauge	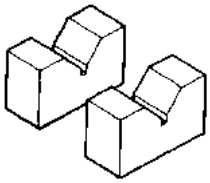 **09900–21304** Steel “V” block set
 **09900–22301** Plastigauge (0.025 – 0.076 mm)	 **09900–25010** Pocket tester	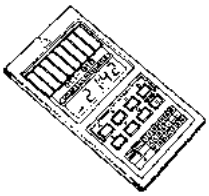 **09900–26006** Engine tachometer	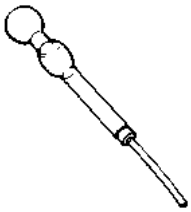 **09900–28403** Hydrometer	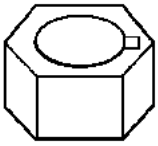 **09911–48900** Crankshaft holder
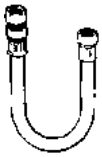 **09912–58432** Fuel pressure hose	 **09912–58442** Fuel pressure gauge	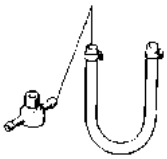 **09912–58490** 3-way joint & hose	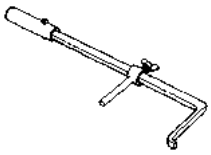 **09913–50121** Oil seal remover	 **09915–63311** Compression gauge attachment
 **09915–64512** Compression gauge	 **09915–77311** Oil pressure gauge	 **09915–78211** Oil pressure gauge adapter	 **09916–10911** Valve lapper	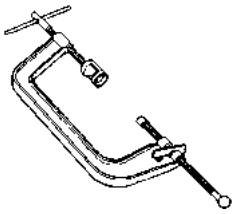 **09916–14510** Valve lifter

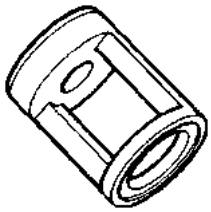 **09916–14521** Valve lifter attachment	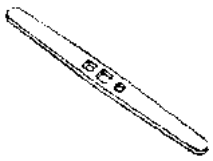 **09916–34542** Valve guide reamer handle	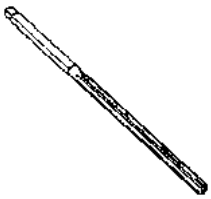 **09916–34550** Valve guide reamer (ø 5.5 mm)	 **09916–38210** Valve guide reamer (ø 11 mm)	 **09916–44910** Valve guide remover
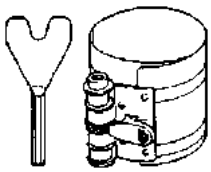 **09916–77310** Piston ring compressor	 **09916–84511** Tweezers	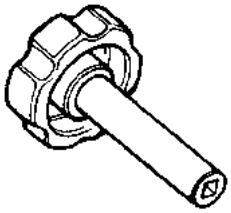 **09917–14910** Valve adjustment driver	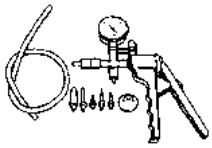 **09917–47011** Vacuum pump gauge	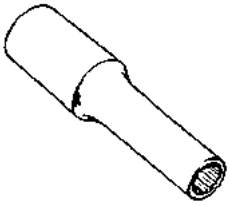 **09919–19910** Deep socket wrench (8 mm)
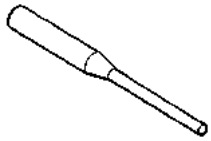 **09922–89810** Shift lock pin remover	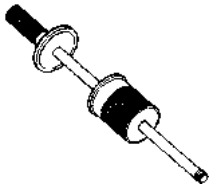 **09930–30104** Sliding hammer	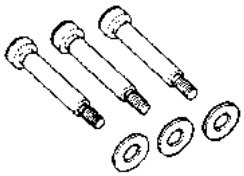 **09930–39210** Flywheel remover bolt	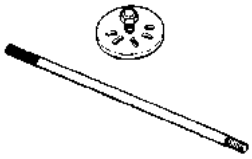 **09930–39411** Flywheel remover	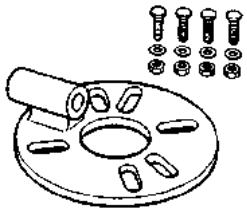 **09930–39520** Flywheel holder
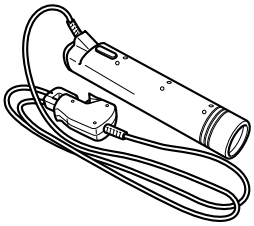 **09930–76310** Timing light	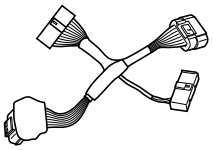 **09930–88940** 26-pin test cord	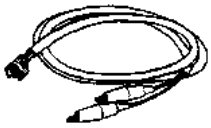 **09930–89260** Injector test cord (A)	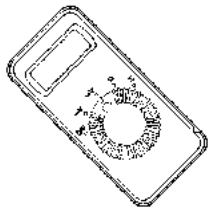 **09930–99320** Digital tester	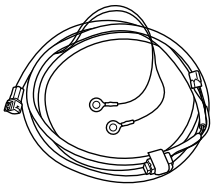 **09933–08910** ECM power source cable
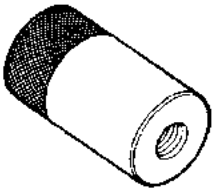 **09950–59320** Propeller shaft remover	 **09950–69512** Gearcase oil leakage tester	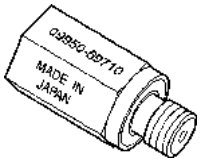 **09950–69710** Attachment	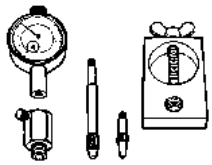 **09951–09530** Gear adjusting gauge	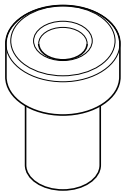 **09951–18910** Pinion bearing remover and installer attachment

 **09951–29910** Nut	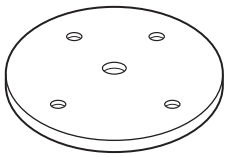 **09951–38710** Plate	 **09951–49910** Removal shaft	 **09951–59910** Shaft (removal and installation)	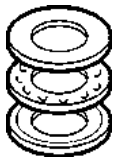 **09951–69910** Bearing
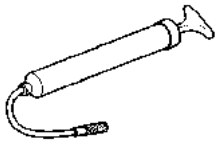 **09952–99320** Hand air pump	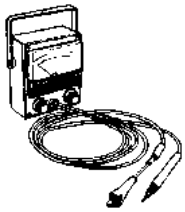 Stevens peak reading voltmeter CD-77			

Maintenance and Tune-Up

Precautions

Precautions for Maintenance

CENDK1110200001

The “Periodic Maintenance Schedule Chart” lists the recommended intervals for all the required periodic service work necessary to keep the motor operating at peak performance and economy.
Maintenance intervals should be judged by number of hours or months, whichever comes first.

NOTE

More frequent servicing should be performed on outboard motors that are used under severe conditions.

General Description

Recommended Oil and Lubricants

CENDK1110201001

Refer to “Fuel and Oil Recommendations” in Section 0A (Page 0A-4).

Scheduled Maintenance

Periodic Maintenance Schedule Chart

CENDK1110205001

NOTE

I = Inspect and clean, adjust, lubricate or replace, if necessary
T = Tighten
R = Replace

Item to be serviced	Interval			
	Initial 20 hrs. or 1 month	Every 100 hrs. or 12 months	Every 200 hrs. or 12 months	Every 300 hrs. or 36 months
Spark plug	—	I	—	—
Breather hose and fuel line	I	I	—	—
Engine oil	R	R	—	—
Gear oil	R	R	—	—
Lubrication	I	I	—	—
Anodes (external)	I	I	—	—
Anodes (internal powerhead)	—	I	—	—
Battery	I	I	—	—
Engine oil filter	R	—	R	—
Low pressure fuel filter	I	I	—	—
	Replace every 400 hours or 2 years.			
Timing belt	—	—	I	—
	Replace every 4 years.			
Ignition timing	—	—	I	—
Idle speed	I	—	I	—
Valve clearance	I	—	I	—
Water pump	—	—	I	—
Water pump impeller	—	—	I	R
Propeller nut and pin	I	I	—	—
Bolt and Nuts	T	T	—	—

Lubrication Point

CENDK1110205002

Proper lubrication is important for the safe, smooth operation and long life of each working part of the outboard motor. Apply Suzuki Water Resistant Grease to the following point.

Lubricate

Initially after 20 hours (1 month) and every 100 hours (12 months)

: Grease 99000–25350 (SUZUKI Water Resistant Grease EP2 (250 g))

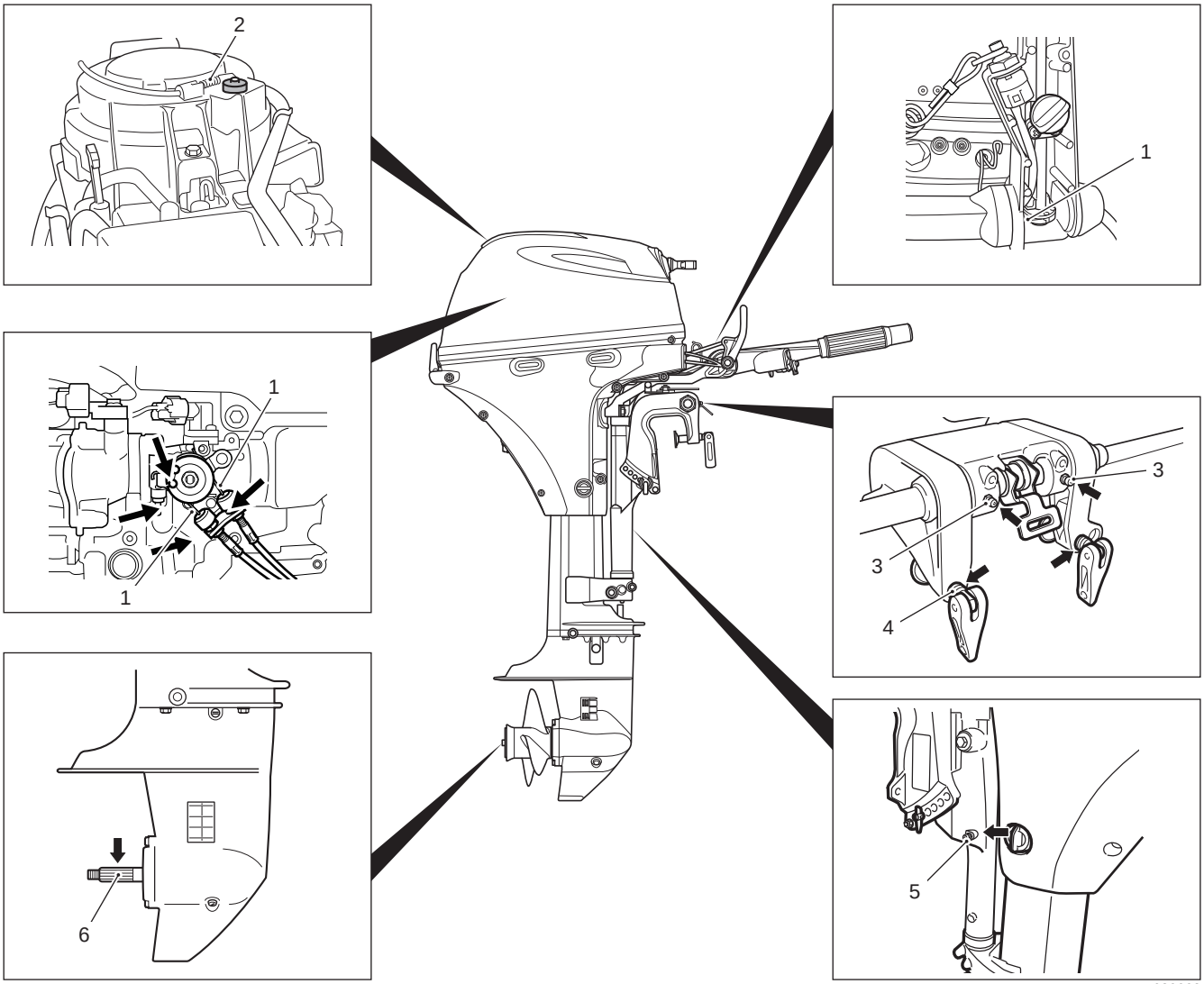

IDK111020008-01

1. Throttle cable	3. Grease nipple, swivel bracket	5. Grease nipple, steering bracket
2. NSI cable	4. Clamp screw	6. Propeller shaft

Service Instructions

Engine Oil Level Check

CENDK1110206001

Inspect oil level
Before every use

1) Place outboard motor upright on a level surface.
2) Remove motor cover.
3) Remove oil level dipstick (1) and wipe it clean.

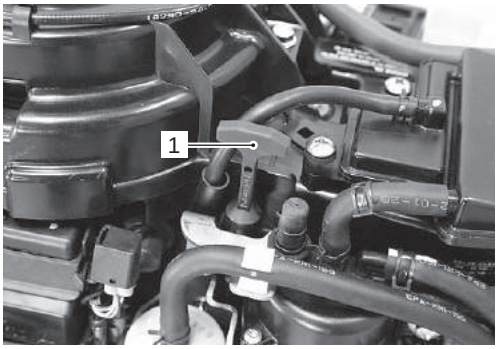

IDK111020011-01

4) Reinsert dipstick fully into dipstick tube, then remove it to check oil level.
5) Oil level should be between full level Max. mark (hole) and low level Min. mark (hole).
   If level is low, add recommended oil to full level Max. mark.

Recommended engine oil

- **4 stroke motor oil**
- **NMMA FC-W classification:**
  SG, SH, SJ, SL, SM.
  or API classification:
  SG, SH, SJ, SL, SM.
- **Viscosity rating:**
  NMMA FC-W 10W-40 or SAE 10W-40

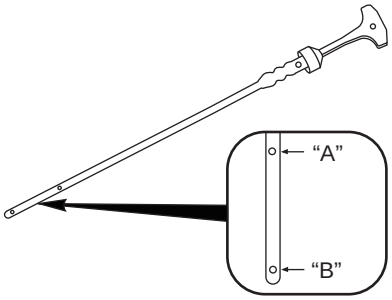

IDK111020009-02

"A": Max. mark (hole)	"B": Min. mark (hole)

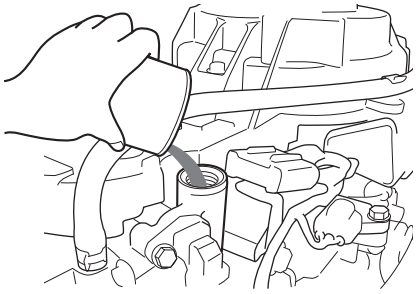

IDK111020013-01

Engine Oil Change and Engine Oil Filter Replacement

CENDK1110206002

Change engine oil
Initially after 20 hours (1 month) and every 100 hours (12 months)

Replace engine oil filter
Initially after 20 hours (1 month) and every 200 hours (12 months)

NOTE

- **Engine oil should be changed while engine is warm.**
- **When replacing engine oil filter, change engine oil at the same time.**

Engine Oil Change

1) Place outboard motor upright on a level surface.
2) Remove oil filler cap (1).

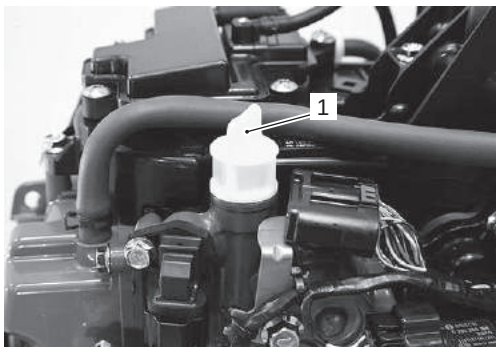

IDK111020003-01

3) Place a container under engine oil drain plug.
4) Remove engine oil drain plug (2) and gasket (3) to drain engine oil.

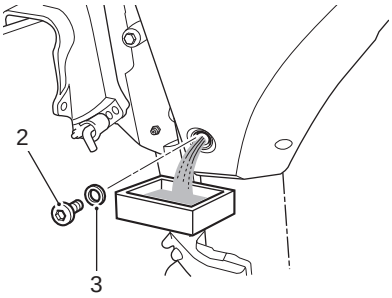

IDK111020014-01

5) Install new gasket and oil drain plug.
Tighten engine oil drain plug to specified torque.

NOTICE

A previously-used gasket may leak, resulting in engine damage.

To avoid water entry into oil pan or oil leakage into the environment do not reuse gasket once removed.
Always use a new one.

Tightening torque
Engine oil drain plug (a): 13 N·m (1.3 kgf-m, 9.5 lbf-ft)

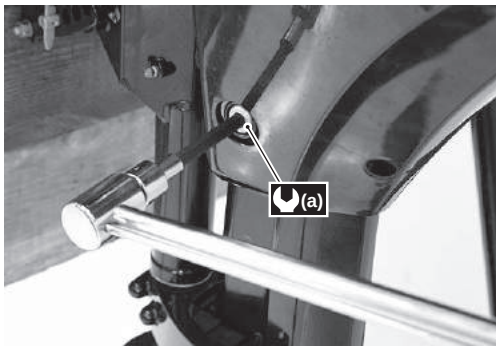

IDK111020015-01

6) Pour the recommended engine oil into oil filler opening, then install oil filler cap.

Recommended engine oil

- **4 stroke motor oil**
- **NMMA FC-W classification:**
  SG, SH, SJ, SL, SM. or API classification:
  SG, SH, SJ, SL, SM.
- **Viscosity rating:**
  NMMA FC-W 10W-40 or SAE 10W-40

Engine oil amounts
Oil change only: 1.0 L (1.1/0.9 US/Imp.qt)
Oil filter change: 1.1 L (1.2/1.0 US/Imp.qt)

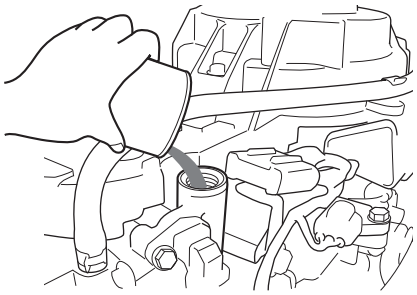

IDK111020013-01

7) Start engine and allow it to run for several minutes at idle speed.
Check oil drain plug for oil leakage.
Turn off engine and wait for approx. two minutes, then recheck engine oil level.
8) To reset oil change reminder system's operation time to zero (cancellation).

NOTE

Refer to "Oil Change Reminder System Description" in Section 1A (Page 1A-14).

Engine Oil Filter Replacement

1) Drain engine oil in the same manner of engine oil change procedure.
2) Remove PORT side cover.
Refer to "Lower Side Cover Removal and Installation" in Section 2A (Page 2A-2).
3) Remove the fuel filter (1) from filter bracket.

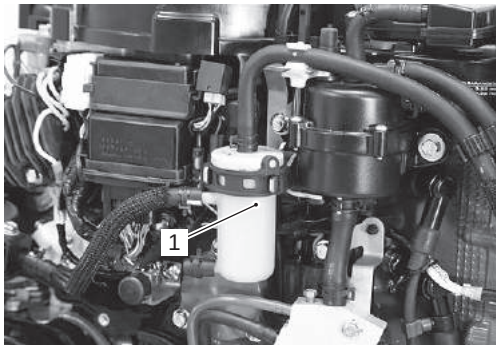

IDK111020016-01

4) Place a shop cloth under the oil filter cap before removal to absorb any oil released.
5) Remove the three bolts securing the oil filter cap (2), then remove filter cap and oil filter (3).

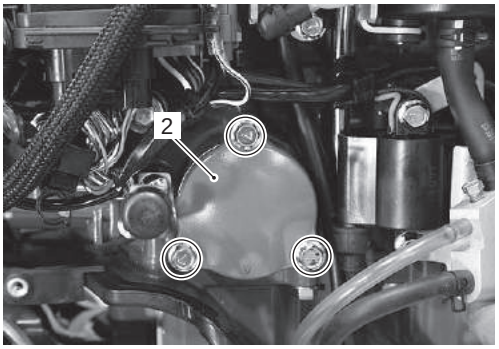

IDK111020017-01

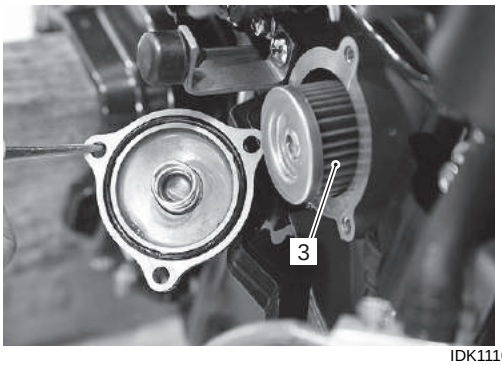

IDK111020018-01

NOTICE

If the filter is installed improperly, serious engine damage may result.

Make sure that the oil filter installed properly.

NOTICE

A previously-used O-ring may leak, resulting in engine damage.

Do not re-use the O-ring once removed. Always use a new one.

6) Replace the O-ring (4) with a new one.

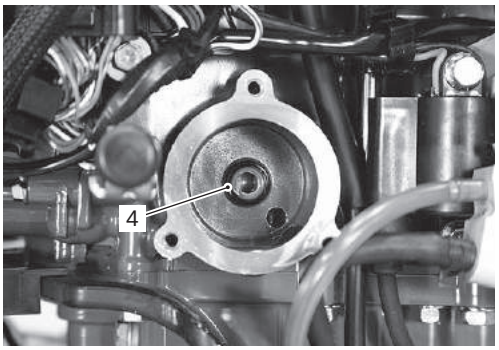

IDK111020019-01

7) Install the spring (5) to the oil filter cap.
8) Replace the O-ring (6) with a new one and oil it.
9) Install the new oil filter (7).

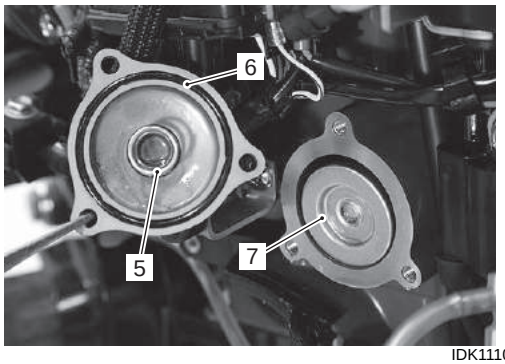

IDK111020020-01

10) Install the oil filter cap, then tighten three bolts securely.

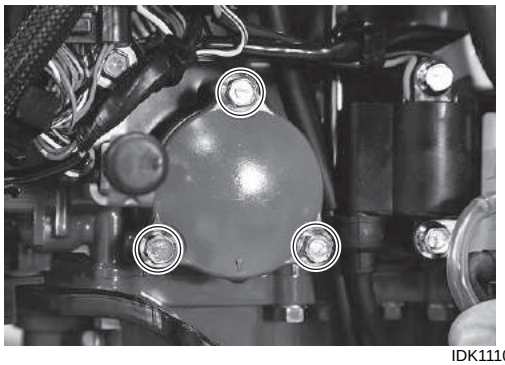

IDK111020021-01

11) Install the fuel filter to original position.

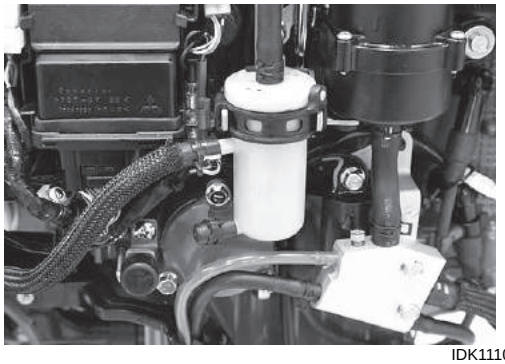

IDK111020022-01

12) Install PORT side cover.
Refer to “Lower Side Cover Removal and Installation” in Section 2A (Page 2A-2).

13) Pour the recommended engine oil into the oil filler opening, then install oil filler cap.
Check the oil level in the same manner of engine oil change procedure.

Recommended engine oil

- **4 stroke motor oil**
- **NMMA FC-W classification:**
  SG, SH, SJ, SL, SM.
  or API classification:
  SG, SH, SJ, SL, SM.
- **Viscosity rating:**
  NMMA FC-W 10W-40 or SAE 10W-40

Engine oil amounts
Oil change only: 1.0 L (1.1/0.9 US/Imp.qt)
Oil filter change: 1.1 L (1.2/1.0 US/Imp.qt)

14) Start engine and allow it to run for several minutes at idle speed.
Check that there are no leaks around oil filter cap.
Turn off engine and wait for approx. two minutes, then recheck engine oil level.

15) Reset oil change reminder system’s operation time to zero (cancellation).

NOTE

Refer to “Oil Change Reminder System Description” in Section 1A (Page 1A-14).

Gear Oil Change

CENDK1110206003

Change gear oil
Initially after 20 hours (1 month) and every 100 hours (12 months)

1) Place outboard motor upright on a level surface.
2) Place a container under the lower unit.
3) Remove lower gear oil drain plug (1) first, then remove gear oil level plug (2) and drain gear oil.

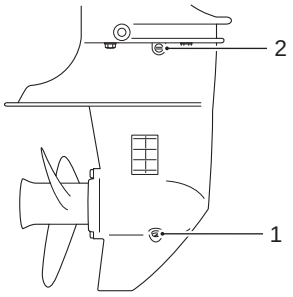

IAJ311020012-01

4) Fill with recommended gear oil through oil drain hole until oil just starts to flow out from oil level hole.

Recommended gear oil

- **Suzuki Outboard Motor Gear Oil or API classification GL5, Viscosity rating SAE # 90 Hypoid gear oil.**

Gear oil amount
250 ml (8.4/8.8 US/Imp. oz)

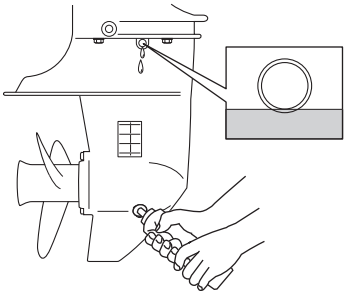

IAJ311020022-01

5) Install oil level plug before removing oil filler tube from drain hole.
6) Install oil drain plug.

NOTICE

An used gasket may leak and allow water to enter the gearcase causing severe damage.

Do not reuse gaskets once removed.
Always use a new gaskets.

NOTE

To avoid a possible low gear oil level, recheck gear oil level 10 minutes after doing procedure in step 6. If oil level is low, add additional gear oil until level is correct.

Spark Plug Removal and Installation

CENDK1110206004

Inspect spark plug
Every 100 hours (12 months)

Standard spark plug
NGK CPR6EA-9

NOTICE

Non-resistor types of spark plugs will interfere with the function of the electronic ignition, causing misfiring, or causing problems with other electronic boat equipment and accessories.

Only resistor (R) type spark plugs must be used with this engine.

Removal

⚠ WARNING

The hot engine can burn you.

Wait until the engine is cool enough to touch.

1) Disconnect the spark plug caps (1).

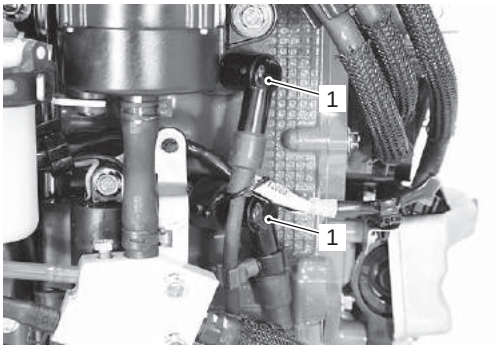

IDK111020023-01

2) Remove the spark plug with spark plug wrench.

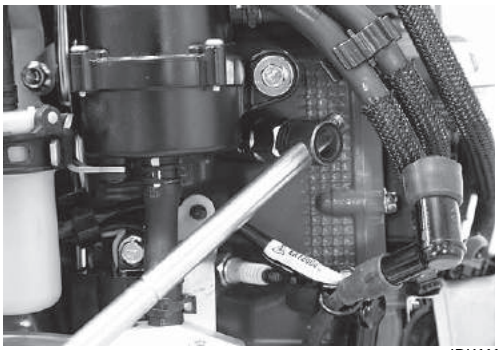

IDK111020024-01

Installation
Installation is reverse order of removal.
Pay attention to the following:

- Tighten the spark plug to specified torque.

Tightening torque
Spark plug (a): 11 N·m (1.1 kgf-m, 8.0 lbf-ft)

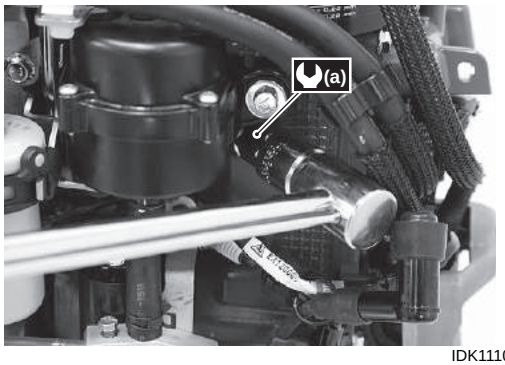

IDK111020025-01

Spark Plug Inspection and Cleaning

CENDK1110206005

NOTICE

Non-resistor types of spark plugs will interfere with the function of the electronic ignition, causing misfiring, or causing problems with other electronic boat equipment and accessories.

Only resistor (R) type spark plugs must be used with this engine.

Inspect spark plug
Every 100 hours (12 months)

Standard spark plug
NGK CPR6EA-9

Carbon Deposits
Inspect for carbon deposits on spark plug base.
If carbon is present, remove it with a spark plug cleaning machine or by carefully using a pointed tool.

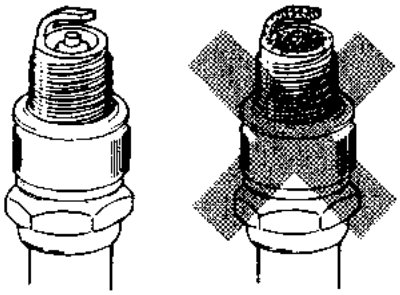

I9J011020005-01

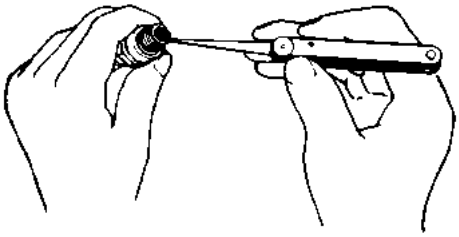

IAJ311020006-01

Spark Plug Gap
Measure spark plug gap with a thickness gauge. Adjust to within specified range if gap is out of specification.

Special tool
TOOL : 09900–20803 (Thickness gauge)

Spark plug gap "a"
Standard: 0.8 – 0.9 mm (0.031 – 0.035 in.)

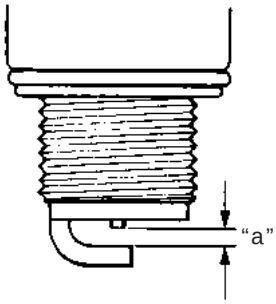

I9J011020007-01

Condition of Electrodes
Inspect electrode for a worn or burnt condition.
If it is extremely worn or burnt, replace spark plug.
Also, be sure to replace spark plug if it has a broken insulator, damaged thread, etc.

NOTICE

Use of improper spark plugs can cause severe engine damage.
If the reach is too short, carbon will be deposited on the threaded portion of the plug hole resulting in possible engine damage.

Confirm the thread size and reach when replacing the plug.

Valve Clearance Inspection and Adjustment

CENDK1110206006

Inspect valve clearance
Initially after 20 hours (1 month) and every 200 hours (12 months)

Inspection

1) Remove following parts:
   - Engine lower side cover.
     Refer to "Lower Side Cover Removal and Installation" in Section 2A (Page 2A-2).
   - Recoil starter.
     Refer to "Recoil Starter Removal and Installation" in Section 1J (Page 1J-3).
   - Spark plugs.
     Refer to "Spark Plug Removal and Installation" (Page 0B-7).
2) Remove the cylinder head cover (1).
   Refer to "Cylinder Head Cover Removal and Installation" in Section 1D (Page 1D-1).

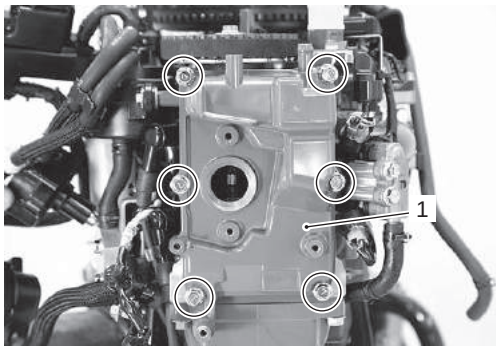

IDK111020026-01

NOTICE

Turning of the engine in counterclockwise can cause water pump impeller damage.

Rotate the crankshaft in the normal running direction only (clockwise) to prevent water pump impeller damage.

3) Rotate the flywheel clockwise to bring each piston to Top Dead Center (TDC) on compression stroke. Align each PUNCH mark on cam pulley with INDEX mark on cylinder head block.

Punch mark	TDC cylinder number
1	No.1 cylinder
2	No.2 cylinder

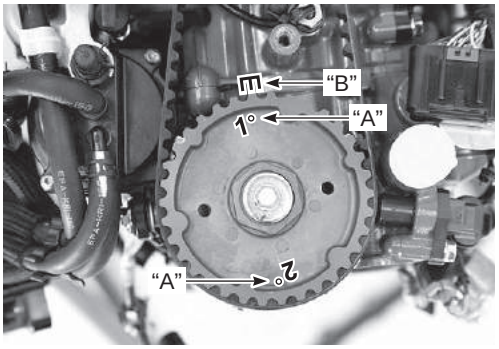

IDK111020028-03

"A": Punch mark (○)	"B": INDEX mark

NOTE

- **The piston must be at its TDC position on a compression stroke to check or adjust valve clearance.**
- **The valve clearance specification is for COLD engine condition.**

4) Measure valve clearances by inserting the thickness gauge between valve stem end and valve adjusting screw on rocker arm.

Special tool
(A): 09900–20803 (Thickness gauge)

Valve clearance (cold engine condition):
IN.: 0.18 – 0.22 mm (0.007 – 0.009 in.)
EX.: 0.18 – 0.22 mm (0.007 – 0.009 in.)

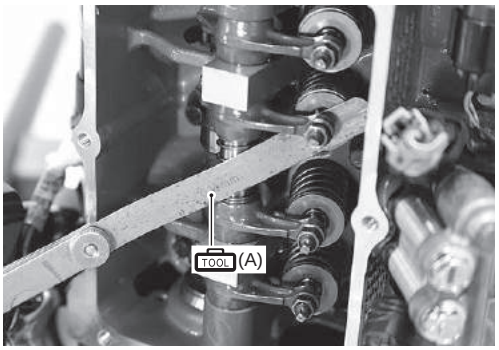

IDK111020029-01

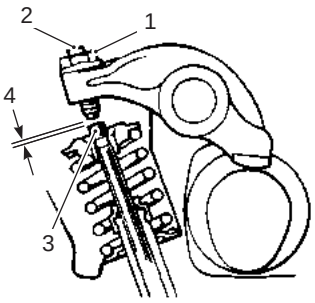

IAJ311020030-02

1. Lock nut	3. Valve stem
2. Valve adjusting screw	4. Valve clearance

5) If measurement is out of specification, adjust valve clearance.

Adjustment

1) Loosen valve adjusting lock nut (1).
2) Turn valve adjusting screw (2) using the valve adjustment driver to bring valve clearance to within specification.

Special tool
(A): 09900–20803 (Thickness gauge)
(B): 09917–14910 (Valve adjustment driver)

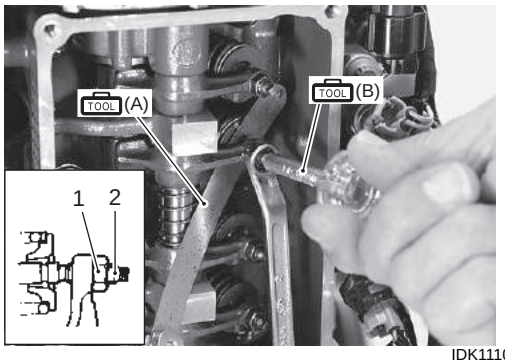

IDK111020030-01

3) Tighten valve adjusting lock nut while holding valve adjusting screw.

Tightening torque
Valve adjusting lock nut (a): 11 N·m (1.1 kgf-m, 8.0 lbf-ft)

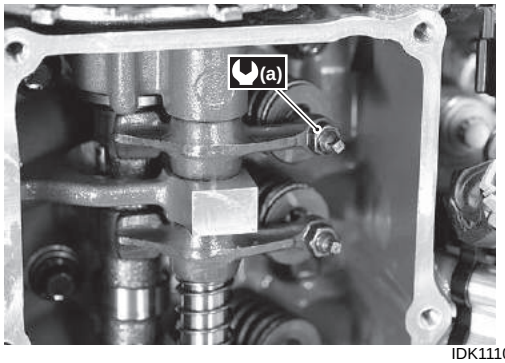

IDK111020031-01

4) Recheck valve clearance.
5) After checking and adjusting all valves, reinstall parts removed earlier.
   Installation is reverse order of removal.
   a) Cylinder Head Cover Installation
      - Install the cylinder head cover.
        Refer to “Cylinder Head Cover Removal and Installation” in Section 1D (Page 1D-1).

NOTICE

A previously-used gasket may leak, resulting in engine damage.

Do not re-use gasket once removed. Always use a new one.

Tightening torque
Cylinder head cover bolts (b): 10 N·m (1.0 kgf-m, 7.2 lbf-ft)

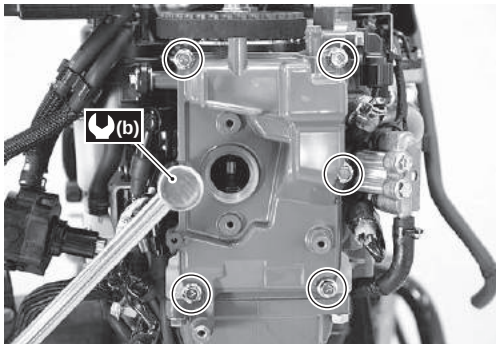

IDK111020032-01

   b) Final assembly check
      - All parts removed have been returned to their original positions.
      - Check hose routing.
        Refer to “Fuel Hose Routing” in Section 4B (Page 4B-2) and “Water Hose Routing” in Section 4B (Page 4B-5).
      - Check oil leakage.

Timing Belt Inspection

CENDK1110206007

Inspect timing belt
Every 200 hours (12 months)

If wear, cracks or other damage is found, replace the timing belt.

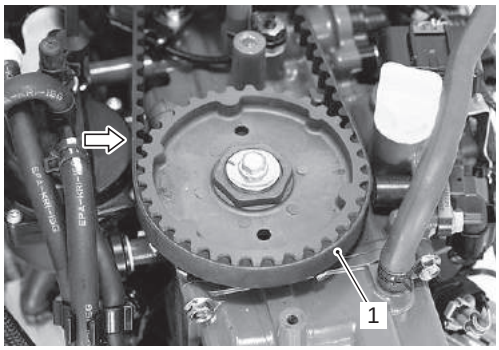

IDK111020033-01

1. Timing belt

Timing Belt Replacement

CENDK1110206008

Replace timing belt
Every 4 years

1) Remove the recoil starter.
   Refer to “Recoil Starter Removal and Installation” in Section 1J (Page 1J-3).
2) Remove the lower side covers.
   Refer to “Lower Side Cover Removal and Installation” in Section 2A (Page 2A-2).
3) Remove the spark plugs.
   Refer to “Spark Plug Removal and Installation” (Page 0B-7).

4) Remove the flywheel (1).
   Refer to “Flywheel Removal and Installation” in Section 1K (Page 1K-4).

   Special tool
   TOOL (A): 09930–39520 (Flywheel holder)
   TOOL (B): 09930–39411 (Flywheel remover)
   TOOL (C): 09930–39210 (Flywheel remover bolt)

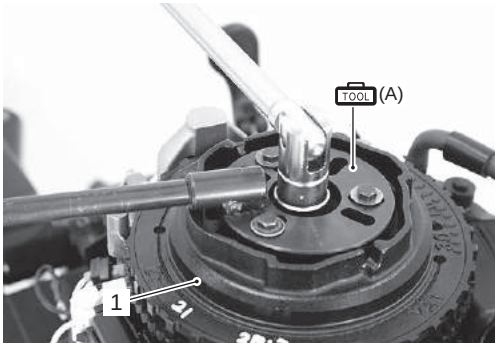

IDK111020034-01

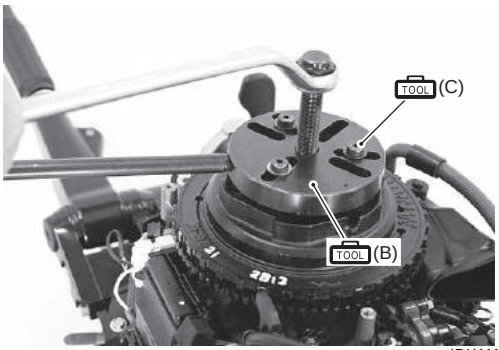

IDK111020035-01

5) Remove the bolt securing regulator bracket (2) to stator base.
   Disconnect the starter switch lead wire connector, caution lamp lead wire connector and engine stop switch lead wire connector.

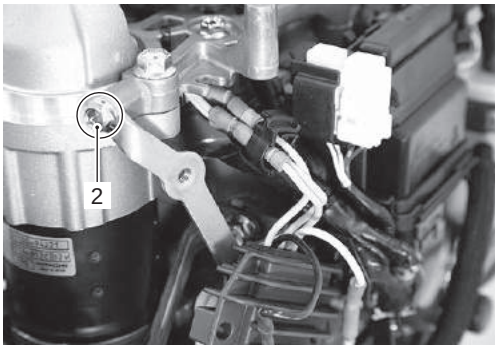

IDK111020036-01

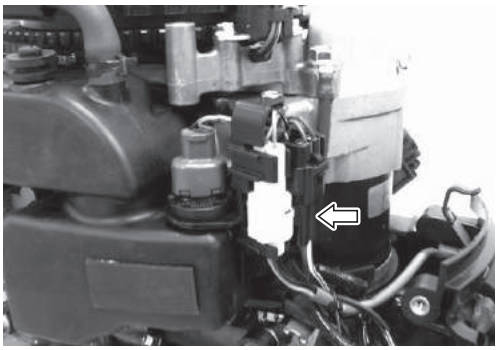
IDK111020037-01

6) Remove the bolt (3) and air intake silencer case (4).

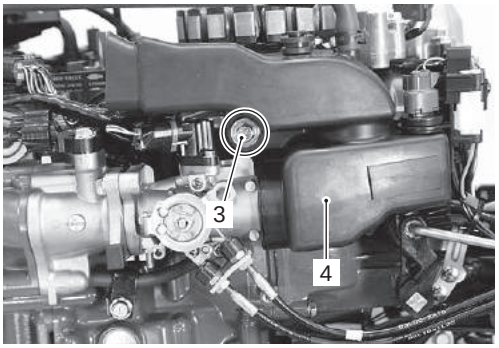

IDK111020038-01

7) Remove the nut (5), positive battery cable (6) and positive lead wire (7) from the starter magnetic switch “B” terminal.
   Disconnect the lead wire (8) from the starter magnetic switch “S” terminal.

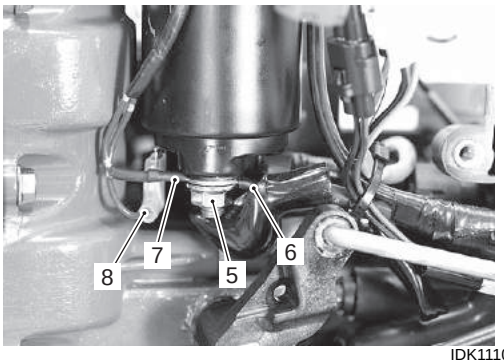

IDK111020039-01

8) Remove the bolt securing joint connector bracket (9).

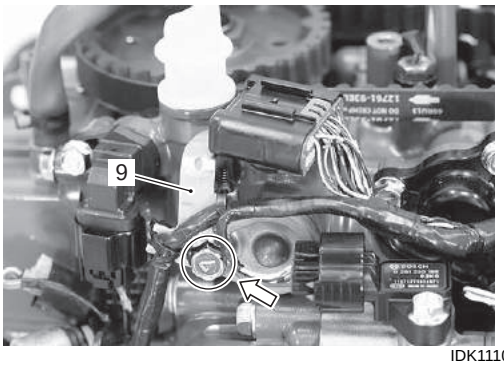

IDK111020040-01

9) Disconnect the lead wire connectors at the following sensors and actuator. (Throttle position sensor, IAC valve, MAP sensor, CMP sensor, Fuel injector)

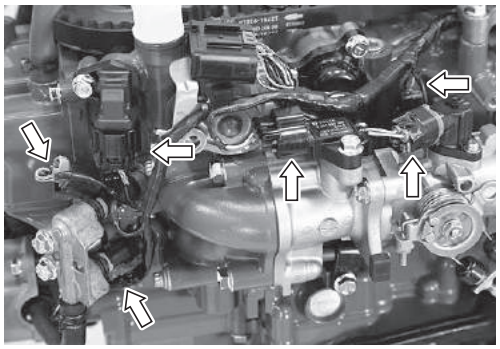

IDK111020041-01

10) Disconnect wire harness connector from ECM, then remove ECM.
Remove the two bolts (10) securing electric parts holder.

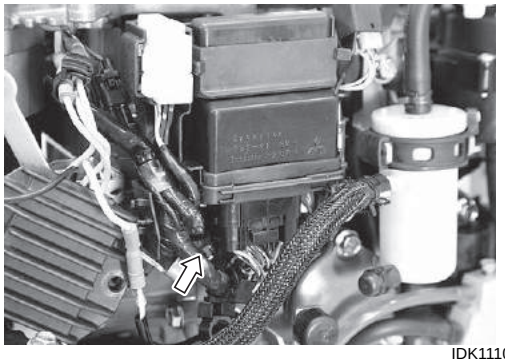

IDK111020042-01

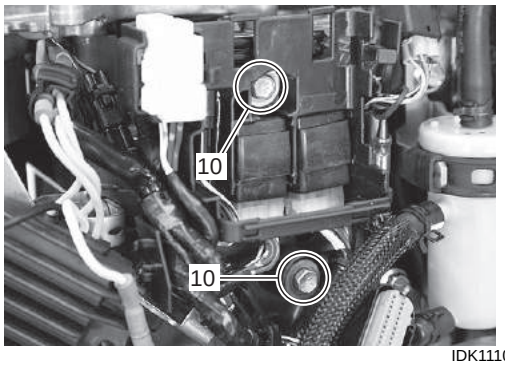

IDK111020043-01

11) Remove the four bolts securing stator base (11).
Remove the two bolts securing starter motor (12).

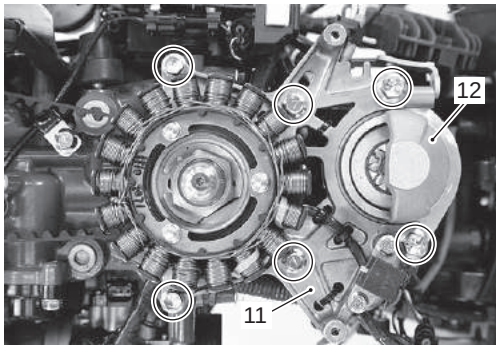

IDK111020044-02

12) Lift stator base from cylinder block and lay it as shown figure.

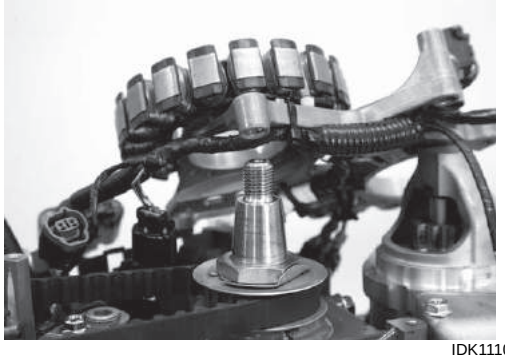

IDK111020045-01

NOTICE

Turning of the engine in counterclockwise can cause water pump impeller damage.

Rotate the crankshaft in the normal running direction only (clockwise) to prevent water pump impeller damage.

13) Rotate the crankshaft to align the PUNCH mark on the timing pulley nut lock washer (13) with the INDEX mark on the cylinder block.

Special tool
TOOL (D): 09911–48900 (Crankshaft holder)

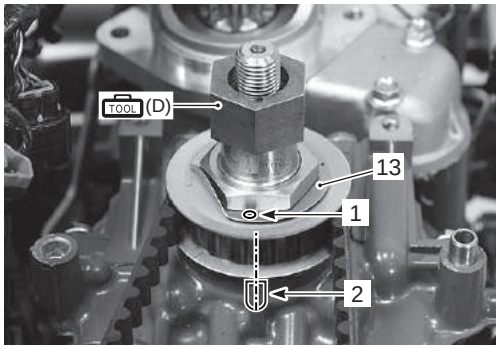

IDK111020046-04

1. PUNCH mark (○)	2. INDEX mark

NOTICE

After the timing belt has been removed, independently turning cam pulley or crankshaft will cause interference between piston and valve, which cause damage to these related parts.

Do not rotate the cam pulley and/or crankshaft with timing belt removed.

14) Remove the timing belt (14) from the cam pulley first, then from the timing pulley.

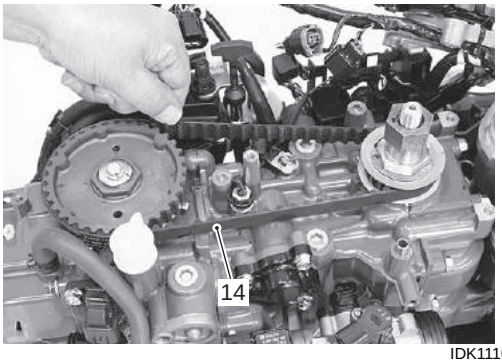

IDK111020047-01

NOTE

- **Do not rotate the crankshaft or the cam pulley before installing the belt; the following must be checked:**
  - **The PUNCH mark on the timing pulley aligns with the INDEX mark on the cylinder block.**
  - **Either of the PUNCH marks on the cam pulley aligns with the INDEX mark on the cylinder head block.**
- **If the timing pulley or the cam pulley is rotated with the timing belt removed or installed but misaligned, this may cause the valves to become bent. If the alignment marks are not correctly matched, loosen the valve adjusting screw lock nuts and the valve adjusting screws fully to prevent valve damage.**
  Then align the marks correctly by rotating the cam pulley clockwise.

15) Install the timing belt on the timing pulley first, then the cam pulley.

NOTICE

Grease, oil or any similar material will damage the timing belt.

Always keep the timing belt away from any grease and oil.

NOTE

The timing belt must be installed with the arrow mark on the timing belt toward the direction of rotation.

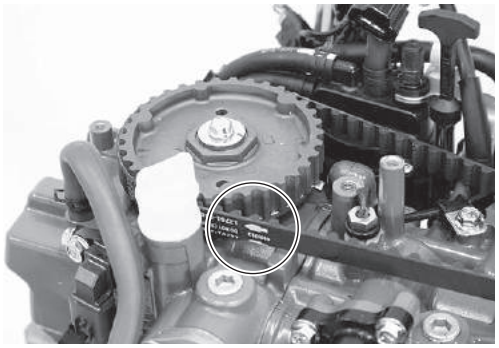

IDK111020048-01

16) Make sure that either of the PUNCH marks on the cam pulley aligns with the INDEX mark on the cylinder head block when the PUNCH mark on the timing pulley nut lock washer aligns with the INDEX mark on the cylinder block.

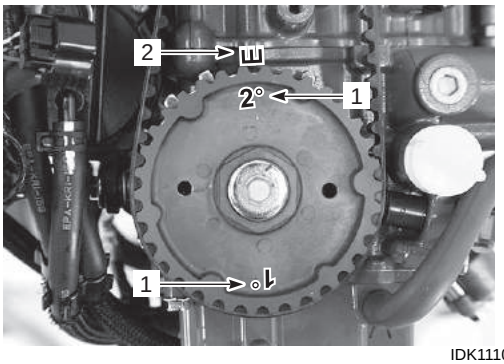

IDK111020049-02

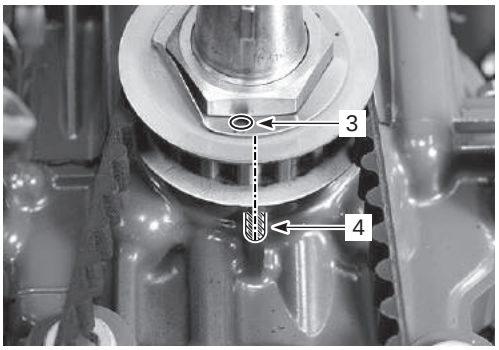

IDK111020050-03

1.	Punch mark on cam pulley
2.	INDEX mark on cylinder head
3.	Punch mark on timing pulley nut lock washer
4.	INDEX mark on cylinder block

17) Install the stator base, then tighten bolts securely. Tighten the starter motor mounting bolts securely.

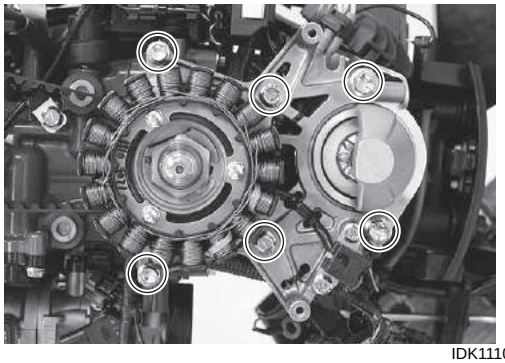

IDK111020051-01

18) Install the following parts.
   a) Flywheel.
   Refer to “Flywheel Removal and Installation” in Section 1K (Page 1K-4).

   Special tool
   TOOL (A): 09930–39520 (Flywheel holder)

   Tightening torque
   Flywheel nut (a): 90 N·m (9.0 kgf-m, 65 lbf-ft)

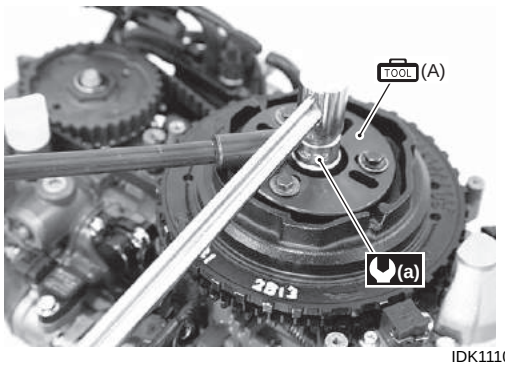

IDK111020052-01

   b) Recoil starter.
   Refer to “Recoil Starter Removal and Installation” in Section 1J (Page 1J-3).
   c) Spark plugs.
   Refer to “Spark Plug Removal and Installation” (Page 0B-7).
   d) Lower side covers.
   Refer to “Lower Side Cover Removal and Installation” in Section 2A (Page 2A-2).

19) Final assembly check.
   - All parts removed have been returned their original positions.
   - Check wire and hose routing.
   Refer to “Wiring Harness Routing Diagram” in Section 4A (Page 4A-3) and “Fuel Hose Routing” in Section 4B (Page 4B-2) and “Water Hose Routing” in Section 4B (Page 4B-5).

Idle Speed and Idle Air Control (IAC) Duty Inspection

CENDK1110206009

Inspect idle speed and IAC duty
Initially after 20 hours (1 month) and every 200 hours (12 months)

NOTE

Before checking idle speed/IAC duty, make sure of the following.
- **Engine must be warmed up.**
- **Check idle speed after engine speed has stabilized.**
- **Check throttle link mechanism and throttle valve for smooth operation.**
- **Lead wire and hoses of electronic fuel injection and engine control systems are connected securely.**
- **Ignition timing is within specification.**
- **Valve clearance is checked according to maintenance schedule.**
- **No abnormal air drawn in from air intake system.**
  After all items are confirmed, check idle speed.

Inspection

1) Start engine and allow to warm up.
2) Attach engine tachometer cord to the ignition coil high-tension cord.

   Special tool
   TOOL : 09900–26006 (Engine tachometer)

   NOTE

   Check and/or adjust the idle speed after the engine speed has stabilized.

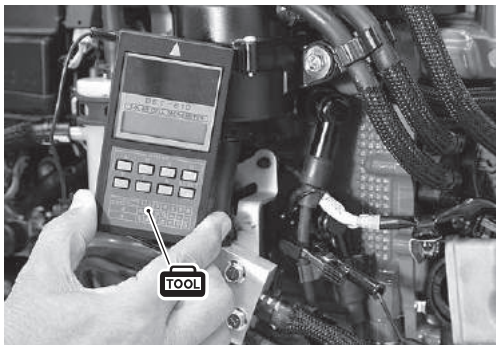

IDK111020053-01

3) Check engine idle speed.

   Idle speed in neutral gear (IAC duty)
   800 – 900 r/min. (Duty: Approx. 10%)

Adjustment

If the idle speed is out of specification, adjust it as follows:

NOTE

Idling/trolling speed is controlled by IAC system.
Do not attempt to adjust the throttle valve opening such as by turning the throttle stop screw.

1) Shift into neutral and close the throttle fully.
2) To set the IAC valve duty in 10% constantly, raise engine speed above 1100 r/min. by turning the by-pass air screw (1) and hold the engine speed for 10 seconds.
   The caution lamp will flash and notify you that the IAC duty is in fixed mode.

   Turning air screw counterclockwise:
   Engine speed will increase.
   Turning air screw clockwise:
   Engine speed will decrease.

NOTE

The IAC duty will not shift to a fixed mode, if engine warm-up is insufficient.

NOTE

- **While IAC valve duty is at a fixed 10% duty, the caution lamp will flash.**
- **The fixed mode will continue for 5 minutes.**

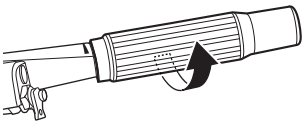

IDK111020054-01

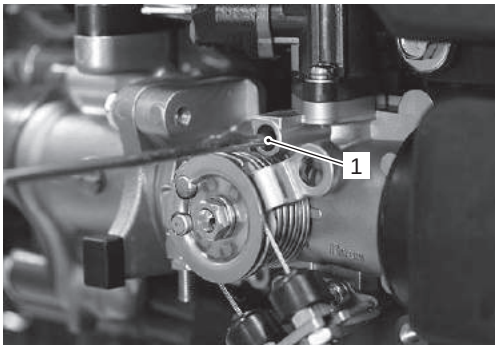

IDK111020055-01

3) During this fixed mode, adjust engine speed to 850 ± 50 r/min by turning by-pass air screw.
4) When finished adjusting the idle speed, opening the throttle will cancel the (IAC) fixed mode.
5) Return the throttle to fully close and check engine speed.
   It should now be stable at 800 – 900 r/min.

NOTE

Trolling speed (in-gear) is same as idle speed.

NOTE

The fixed mode of IAC can also be canceled manually by shifting to Forward or Reverse or raising the engine speed (changes the TPS full close throttle signal to OFF).

NOTE

Idling/trolling speed of 800 – 900 r/min. is controlled by IAC (idle air control) system.
If engine speed does not return to specification, IAC passage may be clogged or IAC system may not be operating correctly.

Ignition Timing Inspection

CENDK1110206011

Inspect ignition timing
Every 200 hours (12 months)

NOTE

Before checking the ignition timing, make sure idle speed is adjusted within specification.

1) Start the engine and allow to warm up.
2) Attach the timing light cord to the ignition coil No.1 cylinder high-tension cord.

Special tool
TOOL (A): 09930–76310 (Timing light)
TOOL : 09900–26006 (Engine tachometer)

IDK111020056-01

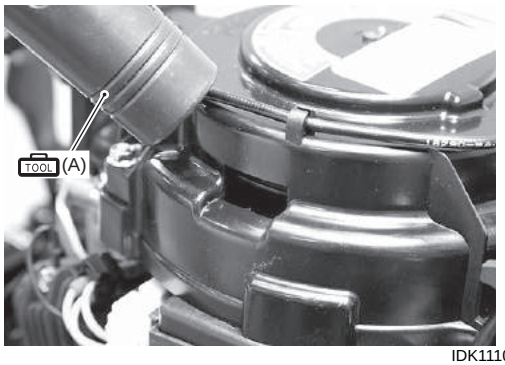

IDK111020057-01

3) Check the ignition timing while operating the engine in neutral gear at 1 000 r/min.

Ignition timing
Approx. 5° BTDC at 1 000 r/min.

Breather Line and Fuel Line Inspection

CENDK1110206012

Inspect breather line and fuel line
Initially after 20 hours (1 month) and every 100 hours (12 months)

If leakage, cracks, swelling or other damage is found, replace the breather hose and/or fuel line.

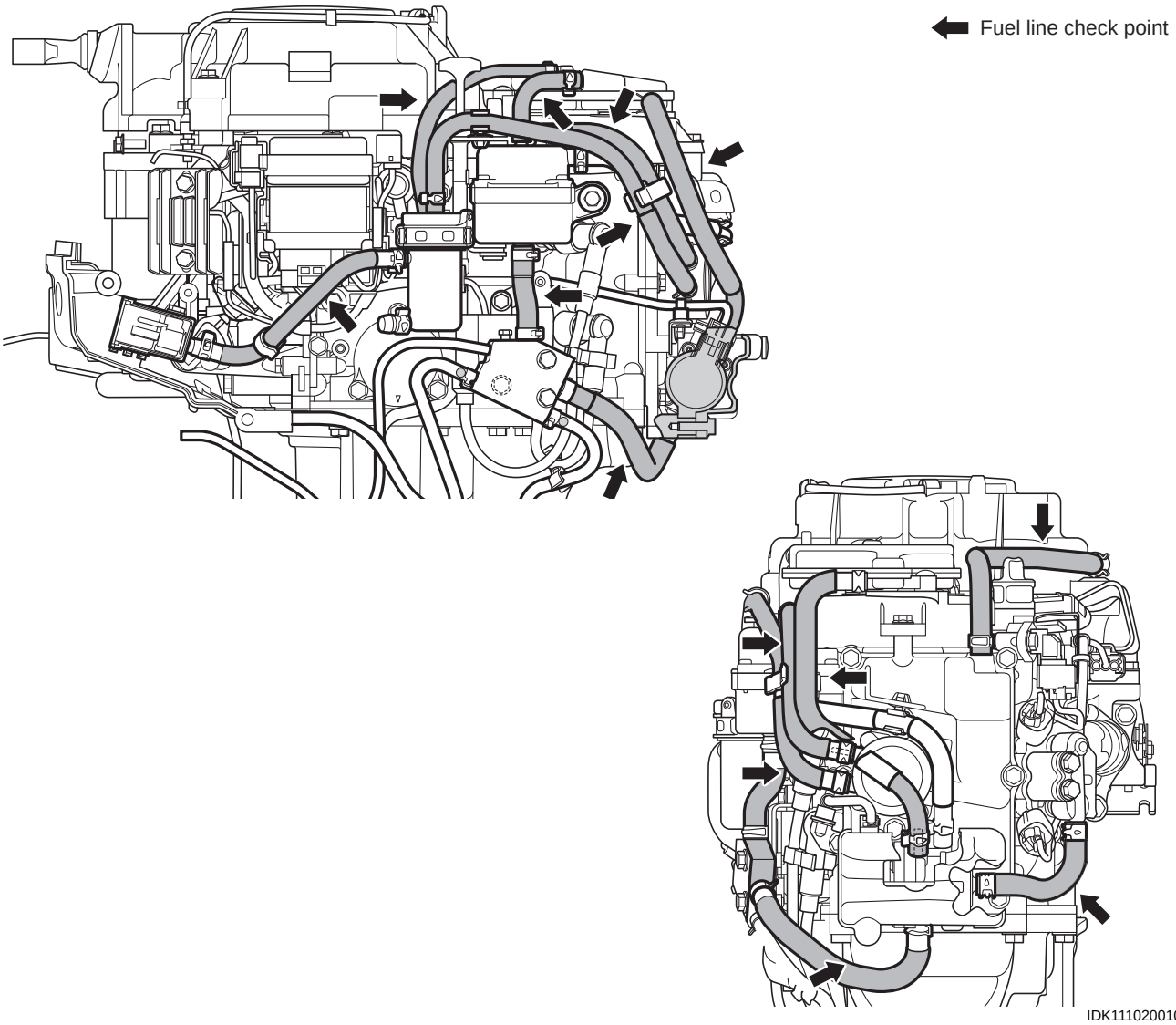

IDK111020010-01

Low Pressure Fuel Filter Inspection

CENDK1110206013

Inspect low pressure fuel filter
Initially after 20 hours (1 month) and every 100 hours (12 months)

Replace low pressure fuel filter
Every 400 hours or 2 years

If water accumulation, sediment, leakage, cracks or other damage is found, replace the fuel filter.

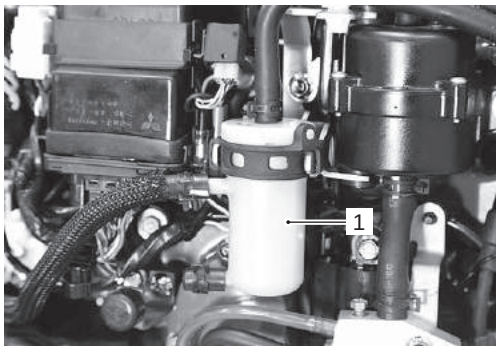

IDK111020058-01

1. Low pressure fuel filter

⚠ WARNING

Gasoline is extremely flammable and toxic. It can cause a fire and can be hazardous to people and pets.

Always take the following precautions when servicing the fuel filter:

- **Stop the motor before cleaning the fuel filter.**
- **Be careful not to spill fuel. If you do, wipe it up immediately.**
- **Do not smoke, and keep away from open flames and sparks.**

1) Turn the engine off.
2) Disconnect the inlet hose (1) and outlet hose (2) from fuel filter (3).

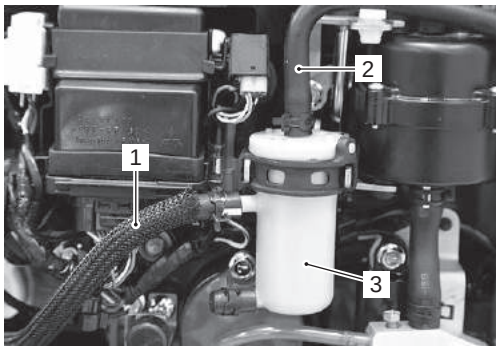

IDK111020059-01

3) Remove the fuel filter (3) from filter bracket (4).
4) Remove the cap (5), then drain and clean fuel filter.
5) Install the cap, then secure it with clip (6).

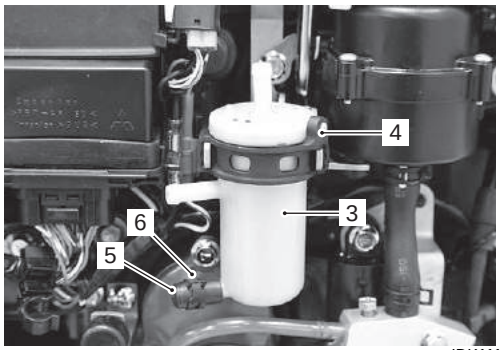

IDK111020060-01

6) Install fuel filter to filter bracket properly.
7) Connect the fuel inlet and outlet hose to fuel filter, then secure the fuel hose to the fuel filter with the hose clip.
8) Restart the engine and check that there are no leaks around the fuel filter.

Water Pump and Water Pump Impeller Inspection

CENDK1110206014

<u>Inspect water pump / pump impeller</u>
Every 200 hours (12 months)

<u>Replace water pump impeller</u>
Every 300 hours (36 months)


IAJ311020055-01

1) Remove the lower unit and water pump case.
   Refer to “Water Pump Removal and Installation” in Section 3A (Page 3A-6).
2) Inspect water pump case, inner sleeve and under panel. Replace if wear, cracks, distortion or corrosion is found.
3) Inspect water pump impeller.
   Replace if vanes are cut, torn or worn.
   SUZUKI recommends that replacing the water pump impeller every 300 hours (36 months).
4) Assemble the water pump related items.
   Refer to “Water Pump Removal and Installation” in Section 3A (Page 3A-6).
5) Install the lower unit assembly.
   Refer to “Lower Unit Removal and Installation” in Section 3A (Page 3A-5).

Propeller / Propeller Nut and Cotter Pin Inspection

CENDK1110206015

<u>Inspect propeller / propeller nut and cotter pin</u>
Initially after 20 hours (1 month) and every 100 hours (12 months)

1) Inspect propeller for bent, chipped or broken blades. Replace propeller if damage noticeably affects operation.
2) Remove the propeller.
   Refer to “Propeller Removal and Installation” in Section 3A (Page 3A-4).
3) Inspect propeller splines. Replace propeller if splines are worn, damaged or twisted.

4) Inspect propeller bush for slippage.
   Replace if necessary.

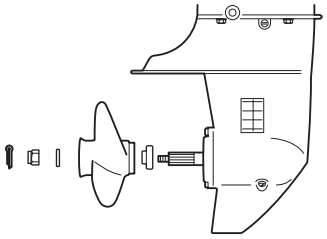

IDK111020007-01

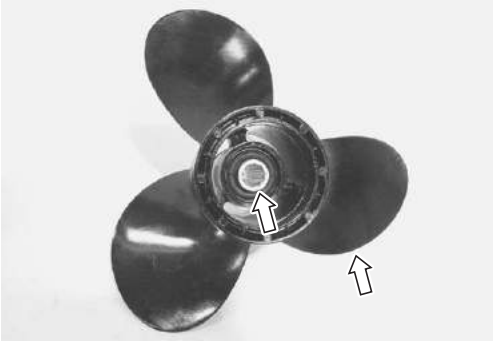

IAJ311020056-01

5) Install the propeller and related parts.
   Refer to “Propeller Removal and Installation” in Section 3A (Page 3A-4).
6) Make sure that propeller nut is torqued to specification and cotter pin is installed securely.

   Tightening torque
   Propeller nut: 18 N·m (1.8 kgf-m, 13.0 lbf-ft)

Anodes Inspection

CENDK1110206016

Inspect anodes (external)
Initially after 20 hours (1 month) and every 100 hours (12 months)

Inspect anodes (internal powerhead)
Every 100 hours (12 months)

If 2/3 of zinc anode has corroded away, replace anode. The anode should be periodically cleaned with a wire brush to ensure maximum effectiveness.

NOTICE

If anodes are not properly maintained, underwater aluminum surfaces (such as the lower unit) will suffer galvanic corrosion damage.

- **Periodically inspect anodes to make sure they have not become detached.**
- **Do not paint anodes, as this will render them ineffective.**
- **Periodically clean anodes with a wire brush to remove any coating which might decrease their protective ability.**

NOTE

The anode securing bolt should be covered with Suzuki silicone seal.

Si : Sealant 93691–80030 (SUZUKI Silicone Seal (100 g))

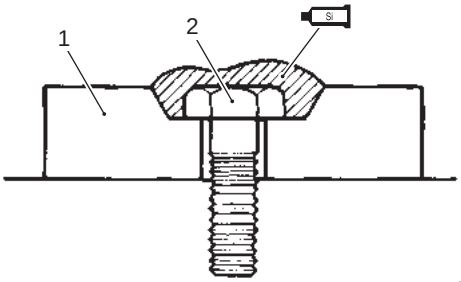

IAJ311020002-01

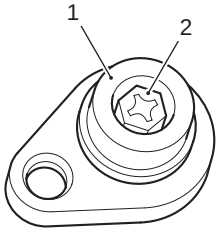

IAJ311020057-01

1. Anode	2. Bolt

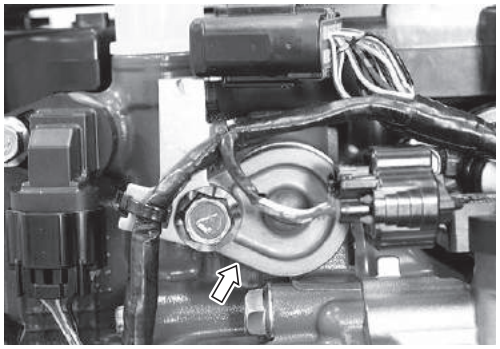

IDK111020061-01

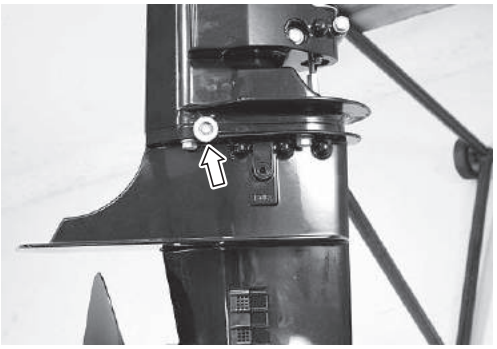

IDK111020062-01

Battery Inspection

CENDK1110206017

Inspect battery

Initially after 20 hours (1 month) and every 100 hours (12 months)

⚠ WARNING

Failure to take proper precautions when handling the battery may cause severe injury.

Be sure to take the following precautions when handling the battery:

- **Never expose the battery to open flames or electric sparks as batteries generate gas which is flammable and explosive.**
- **Do not place the battery near the fuel tank.**
- **Battery acid is poisonous and corrosive. Avoid contact with eyes, skin, clothing, and painted surfaces.**
  If you come in contact with battery acid, flush immediately with large amounts of water and seek immediate medical attention.
- **Batteries should always be kept out of reach of children.**
- **When checking or servicing battery, disconnect the negative (black) cable. Be careful not to cause a short circuit by allowing metal objects to contact the battery posts and motor at the same time.**
- **Wear approved eye protection.**

Recommended battery

12 V 35 AH (126 kC) or larger

Refer to “Battery Requirement” in Section 0A (Page 0A-6).

Connecting Battery

⚠ WARNING

Battery posts, terminals, and related accessories contain lead and lead compounds that may be hazardous.

Wash hands after handling.

NOTICE

The electrical system or its components may be damaged if proper battery precautions are not followed.

- **Be sure to attach battery leads correctly. Wing nuts must not be used and hexagon nuts must be used to secure battery cable to the battery terminals to avoid loss of electrical power.**
- **Do not disconnect battery leads from the battery while the engine is running.**

How to connect

1) Connect positive (+) terminal first.
2) Connect negative (–) terminal second.
3) Upon completion of connection, lightly apply grease to battery terminals.

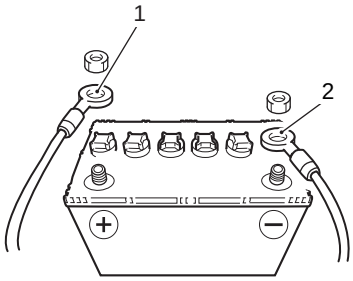

IAJ311020003-01

1. Red lead	2. Black lead

How to disconnect

1) Disconnect negative (–) terminal first.
2) Disconnect positive (+) terminal second.

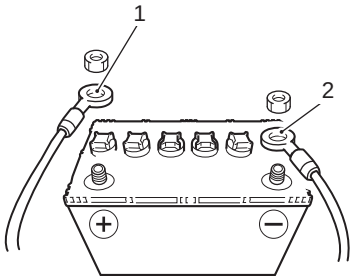

IAJ311020004-01

1. Red lead	2. Black lead

Battery Solution Level Check

NOTICE

If you add diluted sulphuric acid to the battery after it has been initially serviced, you will damage the battery.

NEVER add diluted sulphuric acid to the battery after it has been initially serviced. Follow the battery manufacturer's instructions for specific maintenance procedures.

Battery solution level should be between UPPER level and LOWER level.
If level is low, add distilled water only.

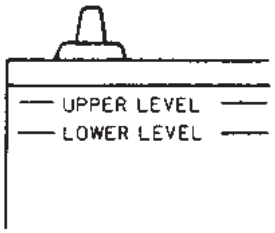

I9J011020031-01

Battery Solution Specific Gravity Check

Measure the specific gravity of battery solution using a hydrometer.

Battery solution specific gravity (temperature)
1.28 (20 °C)

Special tool
TOOL : 09900–28403 (Hydrometer)

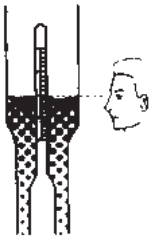

I9J011020032-01

Bolts and Nuts Inspection

CENDK1110206018

Inspect bolts and nuts
Initially after 20 hours (1 month) and every 100 hours (12 months)

Check that all bolts and nuts listed below are tightened to their specified torque.
Refer to "Tightening Torque Specifications" in Section 0A (Page 0A-16).

- Cylinder head cover bolts
- Intake manifold bolts
- Flywheel nut
- Power unit mounting bolts
- Clamp bracket shaft nut
- Gearcase bolts
- Propeller nut

Oil Pressure Check

CENDK1110206019

⚠ CAUTION

Engine oil can be hot enough to burn you.

Do not remove the oil pressure gauge adapter when the engine is hot. Wait until engine cools.

Check the engine oil pressure periodically.

1) Check the engine oil level.
2) Temporarily remove the SDS service connector from electric part holder.
3) Temporarily remove the fuel filter (1) from filter bracket.

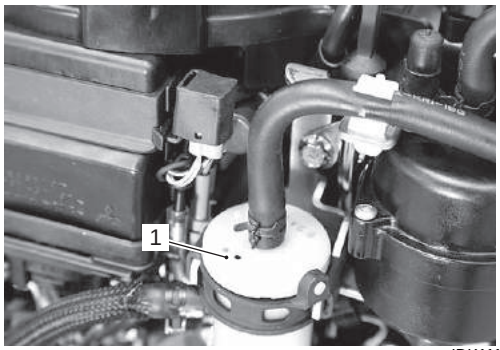

IDK111020063-01

4) Loosen screw and disconnect blue / yellow lead wire (2) from oil pressure switch (3).
Remove the oil pressure switch.

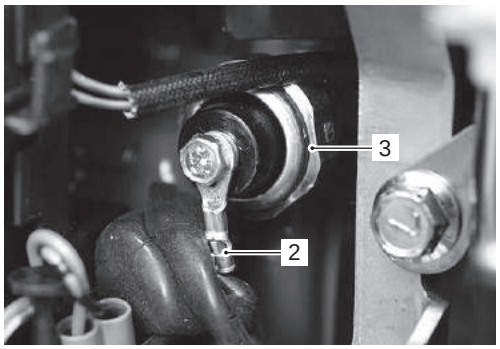

IDK111020064-01

5) Install oil pressure gauge adaptor into oil pressure switch hole in place of oil pressure switch.

Special tool
TOOL (A): 09915–77311 (Oil pressure gauge)
TOOL (B): 09915–78211 (Oil pressure gauge adapter)

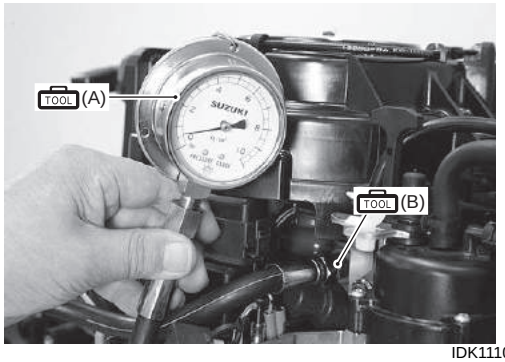

IDK111020065-01

6) Install the fuel filter to filter bracket.
7) Attach the engine tachometer to ignition coil high-tension cord.

Special tool
TOOL (C): 09900–26006 (Engine tachometer)

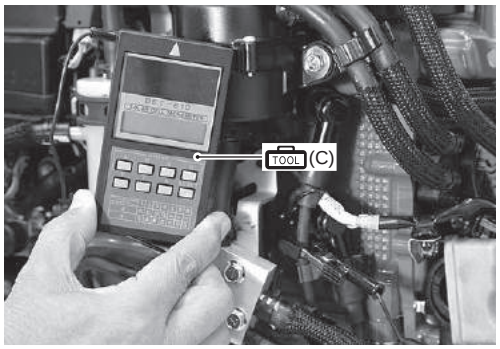

IDK111020066-01

8) Start engine and allow to warm up.
9) After warming up, shift into forward gear and increase engine speed to 3 000 r/min., then compare pressure indicated on gauge to specifications.

NOTE

The figure shown below is a guideline only, not an absolute service limit.

Oil pressure
200 – 500 kPa (2.0 – 5.0 kg/cm^2, 29 – 71 psi.) at 3 000 r/min., oil temp. at normal operating temp.

10) If oil pressure is lower or higher than specification, the following causes may be considered.
Low oil pressure
- Clogged oil filter
- Leakage from oil passages
- Defective oil pump
- Defective oil pressure regulator
- Damage O-ring
- Combination of above items

High oil pressure
- Using an engine oil of too high viscosity
- Clogged oil passage
- Clogged oil pressure regulator
- Combination of above items

11) After testing, reinstall oil pressure switch.
Refer to “Oil Pressure Switch Removal and Installation” in Section 1E (Page 1E-5).
12) Check the engine oil level.

Cylinder Compression Pressure Check

CENDK1110206020

The compression pressure reading of cylinder is good indicator of its internal condition.
The decision to overhaul the power unit is often based on the results of a compression test.
Periodic maintenance records kept at your dealership should include compression readings for each maintenance service.

1) Start engine and allow to warm up, then shut engine off.
2) Remove the STBD / PORT lower side cover.
Refer to “Lower Side Cover Removal and Installation” in Section 2A (Page 2A-2).
3) Remove all spark plugs.

4) Disconnect all fuel injector connectors (1) at fuel injector.

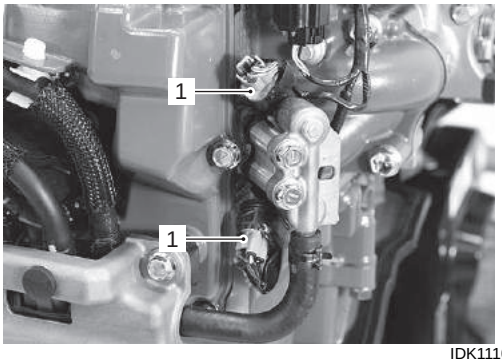

IDK111020067-01

5) Install compression gauge attachment into spark plug hole, then connect compression gauge attachment to compression gauge.

Special tool
TOOL (A): 09915–64512 (Compression gauge)
TOOL (B): 09915–63311 (Compression gauge attachment)

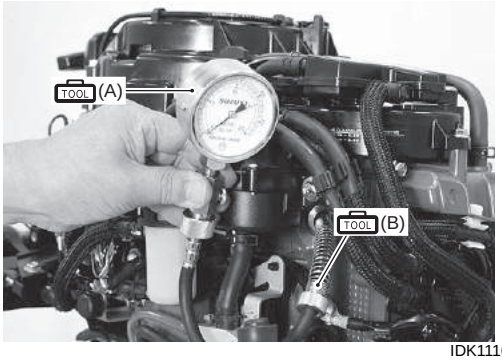

IDK111020068-01

6) Disconnect the safety lanyard from the emergency stop switch.

⚠ WARNING

If this test is performed without disconnecting the safety lanyard from the emergency stop switch, a spark from a spark plug cap may ignite fuel vapor coming out of the spark plug holes during the test, causing a fire or explosion.

Be sure to disconnect the safety lanyard from emergency stop switch before performing this test.

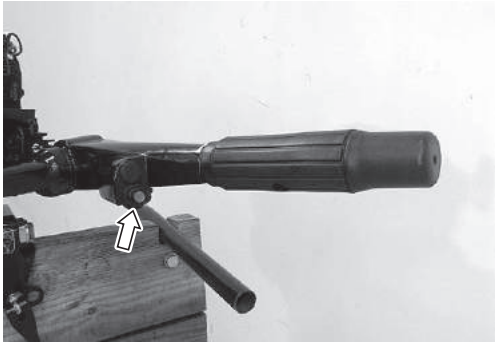

IDK111020069-01

7) Move and hold throttle control grip in the full-open position.

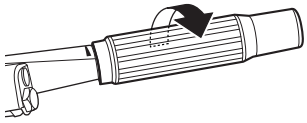

IDK111020070-02

8) While cranking engine with starter motor or recoil starter, note maximum compression pressure reading on gauge for each cylinder.

NOTE

Figures shown are guidelines only, not absolute service limits.

<u>Cylinder compression pressure</u>
With decompression system (DF15A/20A):
Standard: 350 – 900 kPa (3.5 – 9 kg/cm², 50 – 128 psi.)

<u>Cylinder compression pressure max. difference between cylinders</u>
100 kPa (1.0 kg/cm², 14 psi.)

Low compression pressure can indicate one or more of following:

- Excessively worn cylinder wall
- Worn piston or piston rings
- Stuck piston rings
- Poor seating of valves
- Ruptured or otherwise damaged cylinder head gasket

9) Reinstall parts removed earlier (spark plugs, side lower covers, etc.).

Section 1

Power Head

CONTENTS

Precautions

Precautions

Precautions for Powerhead

CENDK1111000001

Refer to “General Precautions” in Section 00 (Page 00-1).

NOTICE

If the electrical circuits is shorted while servicing the power head, the powerhead electrical circuit could be damage seriously.

When the intended service operation does not require electric power supply from the battery, be sure to disconnect the negative cable at the battery before starting the service work.

Engine Control

Precautions

Precautions on Engine Control Diagnosis

CENDK1111100001

⚠ WARNING

Service operation of any type performed on engine control system involves a risk of fire and personal injury if proper precaution are not taken.
To prevent any unexpected engine starting, perform the following before proceeding with any CRANKING tests.

- **When performing tests not related to fuel injector operation:**
  - **Disconnect all fuel injector wire connectors.**
- **When performing tests related to fuel injector operation:**
  - **Relieve the fuel pressure in the fuel lines. Refer to “Fuel Pressure Relief Procedure” in Section 1G (Page 1G-14).**
  - **Disconnect the high pressure fuel pump wire connector located on the high pressure fuel pump.**

⚠ CAUTION

If you do not disconnect the battery before disconnecting or connecting the wiring harness you could get an electrical shock.

- **Always turn the ignition switch “OFF” and disconnect the battery cables when wires are being disconnected or connected.**

NOTICE

Failure to take proper precaution when disconnecting the harness connector can cause damage to the wiring harness.

Hold and pull the connectors when disconnecting.
Do not pull the wires.

NOTE

- **To troubleshoot the ECM, and the engine control system, consisting of sensors and actuators, use the Suzuki Diagnostic System.**
- **The self-diagnostic codes memory in the ECM will remain even if the battery is disconnected.**
- **Each electrical circuit is affected by battery voltage, always use a full-charged battery.**
- **Make sure all ground points have good electrical contact.**
- **Make sure all wires / cables are securely connected.**

General Description

Engine Control System Description

CENDK1111101001

The DF15A/20A models employ an integrated system which performs the control functions for fuel injection, ignition, idle / trolling speed (idle air), etc. through the ECM (Engine Control Module).

System Structure

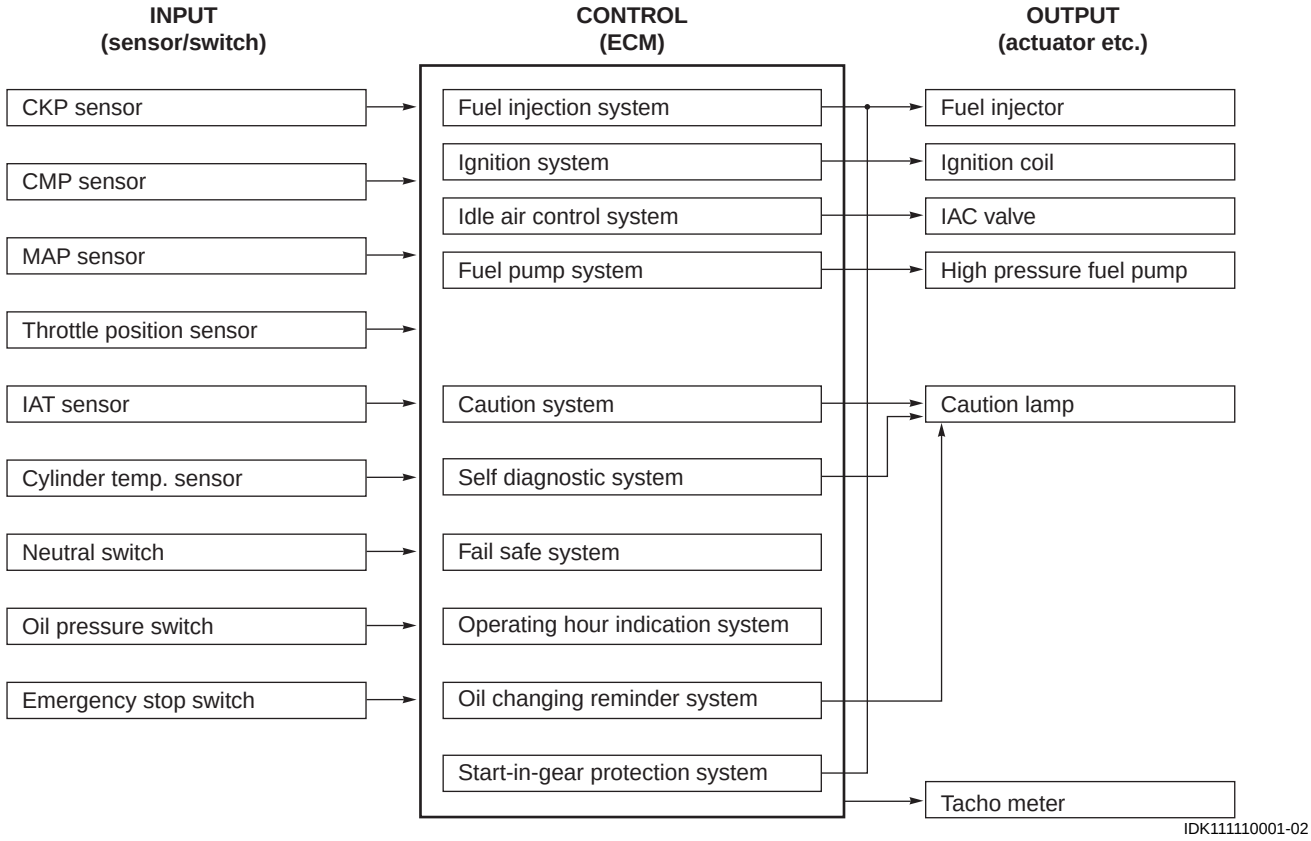

NOTE

The engine operating time can be checked by SDS Ver.7.

Engine Control System Flow Diagram
Electric starter model

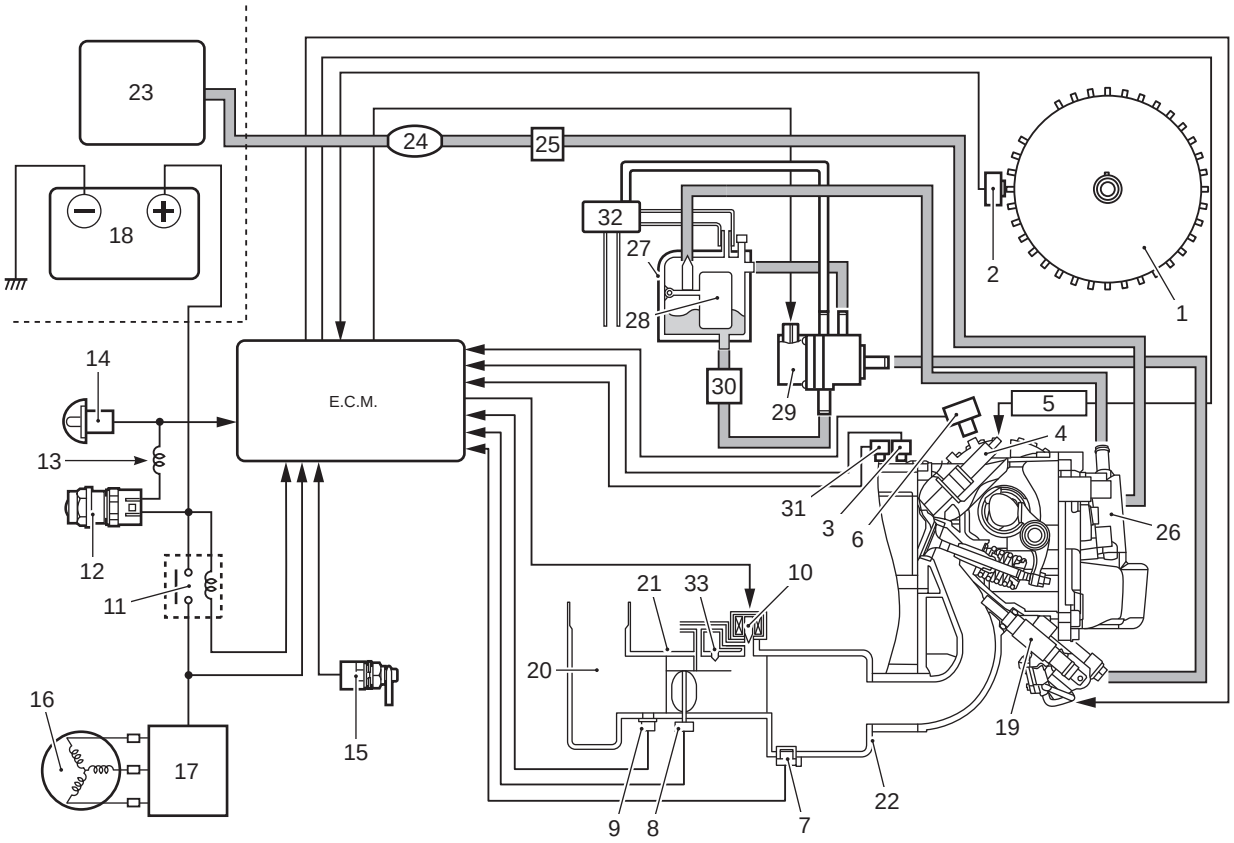

IDK111110002-05

1. Flywheel	10. IAC valve	19. Fuel injector	28. Float
2. CKP sensor	11. Battery relay	20. Air intake silencer	29. High pressure fuel pump
3. Cylinder temp. sensor	12. Starter button	21. Throttle body	30. Fuel cooler
4. Spark plug	13. Starter relay	22. Intake manifold	31. Oil pressure switch
5. Ignition coil	14. Neutral switch	23. Fuel tank	32. Evaporation chamber
6. CMP sensor	15. Emergency stop switch	24. Fuel primer bulb	33. By-pass air screw
7. MAP sensor	16. Battery charge coil	25. Low pressure fuel filter	
8. Throttle position sensor	17. Rectifier / Regulator	26. Low pressure fuel pump	
9. IAT sensor	18. Battery	27. Fuel vapor separator	

Manual starter model

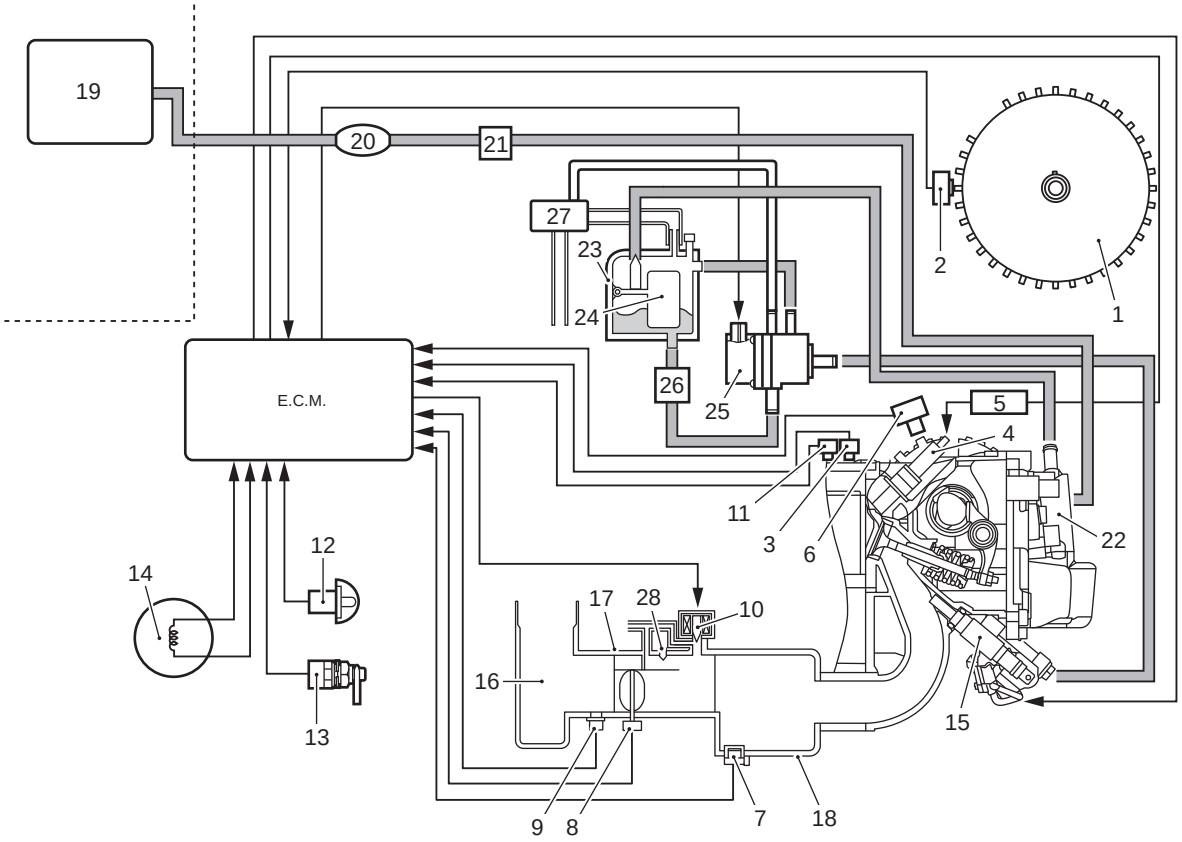

IDK111110003-05

1. Flywheel	8. Throttle position sensor	15. Fuel injector	22. Low pressure fuel pump
2. CKP sensor	9. IAT sensor	16. Air intake silencer	23. Fuel vapor separator
3. Cylinder temp. sensor	10. IAC valve	17. Throttle body	24. Float
4. Spark plug	11. Oil pressure switch	18. Intake manifold	25. High pressure fuel pump
5. Ignition coil	12. Neutral switch	19. Fuel tank	26. Fuel cooler
6. CMP sensor	13. Emergency stop switch	20. Fuel primer bulb	27. Evaporation chamber
7. MAP sensor	14. ECM power source coil	21. Low pressure fuel filter	28. By-pass screw

Engine Control Module (ECM)

CENDK1111101004

The ECM sends signals to control the actuators based on the information inputs from each sensor / switch.
Major controls are as follows:

Name of control	Description
Fuel injection control	• Controls fuel injection amount and timing.
Ignition control	• Controls ignition timing.
Idle air control	• Controls idling / trolling speed by adjusting the intake air volume through the IAC valve.
Fuel pump control	• Controls the high pressure fuel pump drive.
Caution system control	• Informs the operator of abnormal engine conditions. • Controls engine speed, if activated.
Self-diagnostic system control	• Informs the operator of sensor / switch malfunction.
Fail-safe system control	• Allows engine operation with a back-up system during sensor / switch malfunction.
Total operating hour indication system control	—
Oil changing reminder system control	• Informs the operator that it is time to replace the engine oil, based on the maintenance schedule.
Start-in-gear protection system control	• Prevents engine starting when the shift lever is positioned in forward or reverse.

NOTE

- **Information related to the Caution system, Self-Diagnostic System, and Total Operating Hours System is retained in the ECM memory.**
- **The SDS Ver.7 is necessary for checking the total operating time.**
- **ECM is different for the manual starter model and electric starter model.**

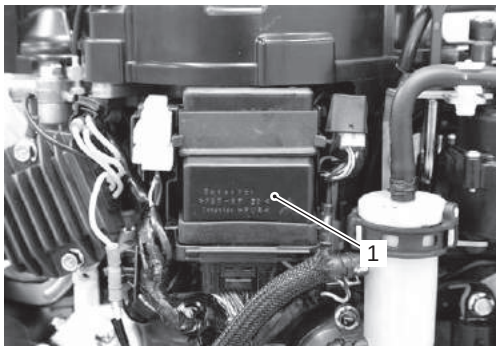

IDK111110032-01

1. ECM

ECM Input / Output Circuit Diagram
Electric starter model

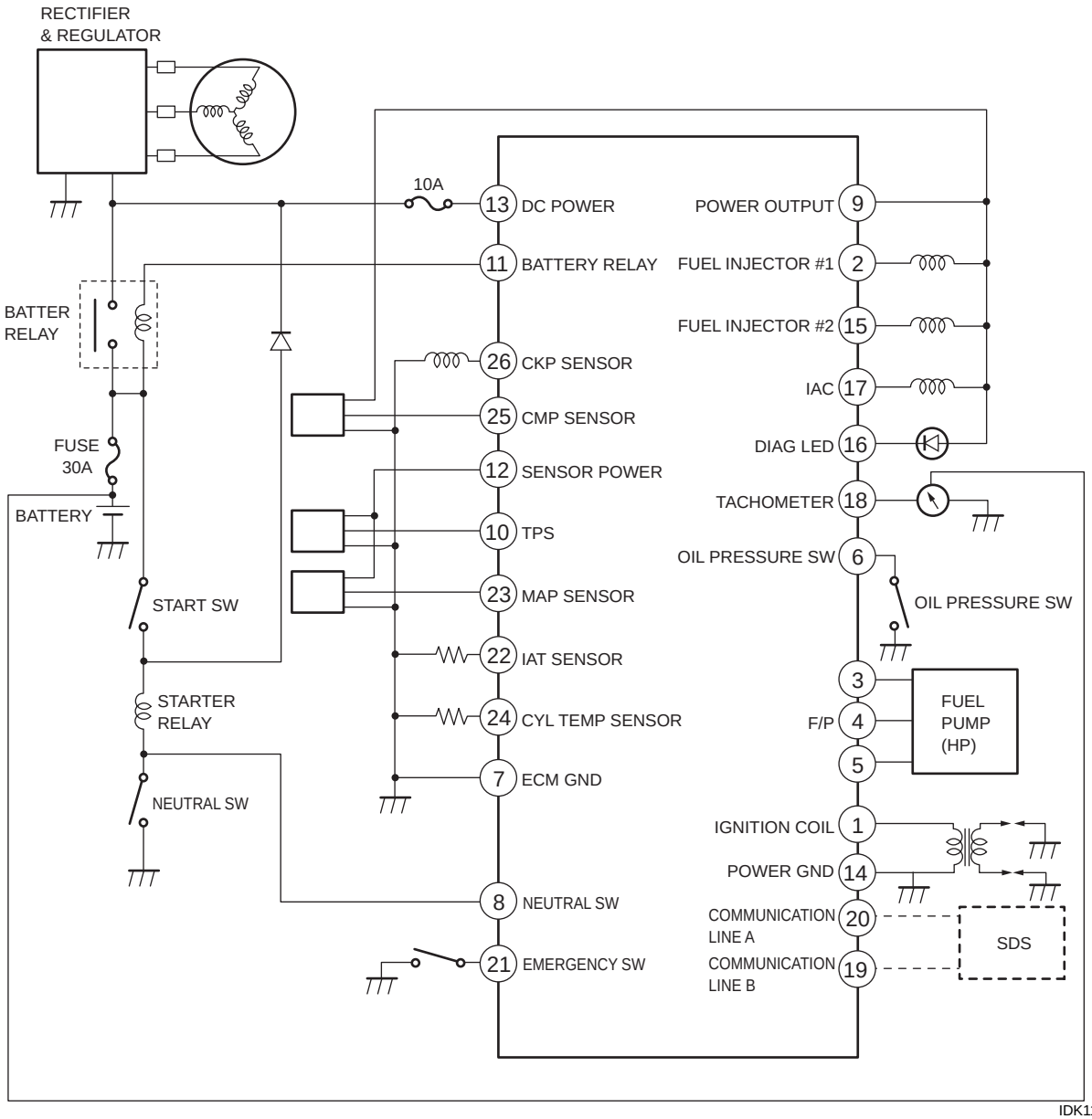

IDK111110005-03

Manual starter model

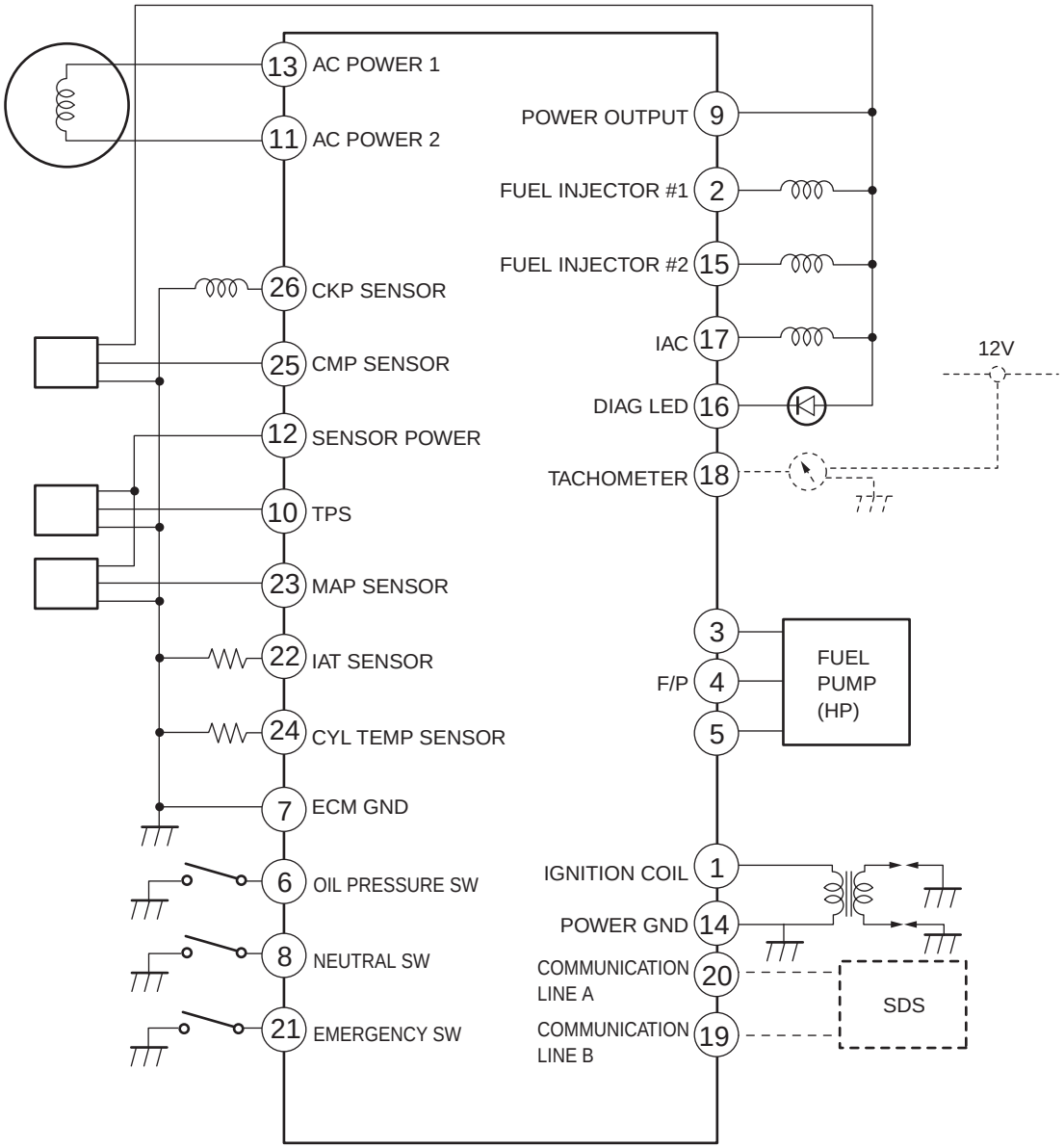

IDK111110006-03

ECM Connector / Terminals Layout

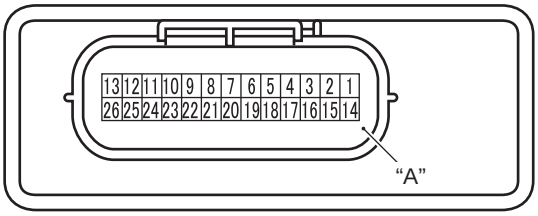

IDK111110007-01

"A": ECM

Electric starter model

Terminal	Wire color	Circuit
1	O	Ignition coil
2	O/B	No.1 Fuel injector
3	B/Y	High pressure fuel pump (V)
4	B/R	High pressure fuel pump (W)
5	B/W	High pressure fuel pump (U)
6	Bl/Y	Oil pressure switch
7	B	Ground for ECM
8	Y/G	Neutral switch
9	Gr/R	Power output
10	Br/Y	Throttle position sensor
11	P/B	Battery relay
12	R	Power for sensor (5 V)
13	W	DC power for ECM
14	B	Ground for ECM power
15	B/Br	No.2 Fuel injector
16	P	Diag LED
17	W/B	IAC valve
18	Y/B	Tachometer
19	Y	Communication line (B)
20	O/Y	Communication line (A)
21	Bl/R	Emergency stop switch
22	Lg/B	IAT sensor
23	W	MAP sensor
24	Lg/W	Cylinder temp. sensor
25	Y/Bl	CMP sensor
26	R/B	CKP sensor

Manual starter model

Terminal	Wire color	Circuit
1	O	Ignition coil
2	O/B	No.1 Fuel injector
3	B/Y	High pressure fuel pump (V)
4	B/R	High pressure fuel pump (W)
5	B/W	High pressure fuel pump (U)
6	Bl/Y	Oil pressure switch
7	B	Ground for ECM
8	Y/G	Neutral switch
9	Gr/R	Power output
10	Br/Y	Throttle position sensor
11	Br/W	AC power No.2 for ECM
12	R	Power for sensor (5 V)
13	Br/R	AC power No.1 for ECM
14	B	Ground for ECM power
15	B/Br	No.2 Fuel injector
16	P	Diag LED
17	W/B	IAC valve
18	Y/B	Tachometer
19	Y	Communication line (B)
20	O/Y	Communication line (A)
21	Bl/R	Emergency stop switch
22	Lg/B	IAT sensor
23	W	MAP sensor
24	Lg/W	Cylinder temp. sensor
25	Y/Bl	CMP sensor
26	R/B	CKP sensor

Caution System Description

CENDK1111101005

The following three caution systems alert the operator when an abnormality occurs on the engine.

- OVER-REVOLUTION CAUTION
- LOW OIL PRESSURE CAUTION
- OVERHEAT CAUTION

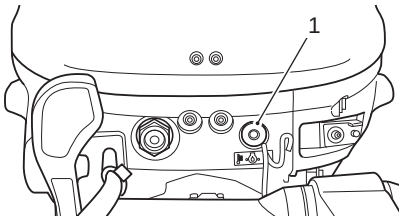

IDK111110023-02

1. Caution lamp

Caution type	Caution lamp	Engine RPM limited
Over-revolution	Yes	Yes
Low oil pressure	Yes	Yes
Overheat	Yes	Yes

Lamp Check

For two seconds after inputting electric power to the ECM:

- The caution lamp turns ON.

Over-Revolution Caution System

Condition:

The ECM controlled over revolution limiter will engage at the engine speeds shown below. Once engaged it will initiate an intermittent fuel injection signal to reduce engine speed.

Over revolution limiter

DF15A: 6 200 r/min

DF20A: 6 300 r/min

Action:

Engine speed	• Automatically reduced to approx.3 000 r/ min. by an intermittent fuel injection signal. • If the operator decreases the engine speed below the over revolution system maximum preset value, within 10 seconds, the over-revolution caution control will be cancelled.
Caution lamp	Caution lamp lights continuously.

Reset:

Close the throttle to reduce the engine speed below approx. 3 000 r/min. for one second.

NOTE

In neutral gear, the preset maximum engine speed value before the over-revolution caution system activates is 3 000 r/min.
In the operation of Neutral gear over-revolution caution system, the caution lamp does not light.
To cancel the Neutral gear over-revolution caution control, close throttle completely.

Low Oil Pressure Caution System

Condition:

Immediate activation of the system when the oil pressure switch is turned “ON” due to an engine oil pressure drop below 15 kPa (0.15 kg/cm^2, 2 psi.) while engine is running.

Action:

Engine speed	• Automatically reduced to approx. 2 000 r/min. maximum by an intermittent fuel injection signal. • The engine automatically stops 3 minutes after the caution system is activated.
Caution lamp	Caution lamp lights continuously.

NOTE

If the engine is automatically stopped due to the caution system, the engine can be started again. However, the caution system will repeatedly activate until the cause is eliminated.

Reset:

Stop the engine and check the engine oil level. Refill the engine oil to the correct level if it is below the low oil level mark.

If the engine oil level is correct, the following causes may be considered:

- Improper oil viscosity.
- Malfunctioning oil pressure switch.
- Clogged oil strainer or oil filter.
- Worn oil pump relief valve.
- Oil leakage from the oil passage.
- Excessive wear / damage of oil pump.

NOTE

The low oil pressure caution system will reset when the oil pressure is restored to over 15 kPa (0.15 kg/cm^2, 2 psi.) at approx. 2 000 r/min. or less engine speed operation.
The engine must be stopped and checked immediately once the system is activated.

Overheat Caution System
Immediate activation of the system when:

- Cylinder temperature reaches 90 °C (194 °F)
- The rate of cylinder wall temperature variation within a given time exceeds the preset rate.

Action:

Engine speed	• Automatically reduced to approx. 3 000 r/min. maximum by intermittent fuel injection and ignition signals. • The engine automatically stops 3 minutes after the caution system is activated.
Caution lamp	Caution lamp lights continuously.

NOTE

If the engine is automatically stopped due to the caution system, the engine can be started again. The caution system will repeatedly activate until the cause is eliminated.

Reset:
System reset will occur when the cylinder temperature drops below the limits shown below. However, the system may be activated again unless the cause for overheat (such as insufficient water) is removed.

Reset temperature	Approx. 70 °C (158 °F)

Battery Charge Cutout System
(Electric starter model)
This system activates when the battery voltage drops to less than 6 volts while the engine is running.
The battery charging circuit is open while the system is activated.
All the charging current from the rectifier / regulator is then used to power the engine control system.

NOTE

- **Charging current will not flow from the rectifier / regulator to the battery while this system is activated.**
- **When the system is activated the starter motor will not operate because the battery voltage is too low.**

Self-Diagnostic System Description

CENDK1111101006

The self-diagnostic system alerts the operator when an abnormality occurs in a signal from a sensor, or switch, etc. When the system is activated, the caution lamp flashes (lights intermittently) according to each code pattern.

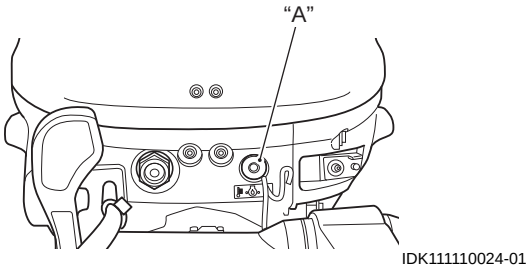

"A": Caution lamp

Priority / Code / Pattern for Self-Diagnostic System Operation

0: OFF, 1: ON

Priority	Failed item	Code	Lamp flashing pattern	Fail-Safe system active
1	MAP sensor 1	3 – 4	 MCODE00D34-0-01	Yes
2	Cylinder temp. sensor	1 – 4	 MCODE00D14-0-01	Yes
3	IAT sensor	2 – 3	 MCODE00D23-0-01	Yes
4	CKP sensor	4 – 2	 MCODE00D42-0-01	No
5	CMP sensor	2 – 4	 MCODE00D24-0-01	No
6	Air intake system	2 – 2	 MCODE00D22-0-01	Yes
7	MAP sensor 2	3 – 2	 MCODE00D32-0-01	No
8	Fuel injector	4 – 3	 MCODE00D43-0-01	No
9	Throttle position sensor	2 – 1	 MCODE00D21-0-01	Yes
10	Rectifier / Regulator (Over-charging)	1 – 1	 MCODE00D11-0-01	No
11	Oil pressure switch (R model)	5 – 3	 MCODE00D53-0-01	No

NOTE

- **If two or more items fail at once, the self-diagnostic indication appears according to the priority order. The indication repeats three times.**
- **If the failed item remains, the self-diagnostic indication appears again after starting the engine.**
- **After correcting the failed item, the self-diagnostic indication appears until the ECM receives the proper signal with the engine running.**
- **Cancellation of the self-diagnostic indication is automatically performed when the failure is corrected and a normal signal is received by the ECM for a period of 20 – 30 seconds.**

Condition for Self-Diagnostic System Operation

Failed item	Condition
MAP sensor 1	• No signal (With engine running). • Receiving an out of range “37 – 860 mmHg (1.45 – 33.85 inHg) (0.2 – 4.5 V)” signal (With the engine running.).
Cylinder temp. sensor	• No signal. • Receiving an out of range “– 40 to + 200 °C (– 40 – +392 °F) (0.10 – 4.9 V)” signal.
IAT sensor	• No signal. • Receiving an out of range “– 40 to + 170 °C (– 40 – +338 °F) (0.10 – 4.8 V)” signal.
CKP sensor	• During one crankshaft rotation, 34 signals are not received by the ECM.
CMP sensor	• During eight crankshaft rotation, the normal CMP sensor signal pattern is not received by the ECM.
Air intake system	• The engine operates at an abnormally high speed when the ECM is receiving a completely closed signal from the throttle position sensor. (Criteria: 2 000 r/min minimum)
MAP sensor 2	• From throttle position sensor, the full close signal is inputted, but from the MAP sensor, the signal voltage exceeds 2.8 V.
Fuel injector	• No operation signal from the ECM.
Throttle position sensor	• No signal. • Receiving an out of range “0.2 – 4.8 V” signal.
Rectifier / Regulator (Over-charging)	• Receiving 16 volts or higher signal.
Oil pressure switch (R-model)	• While the engine is stopped and the ignition switch is on, the ECM receives an “off” signal from the oil pressure switch.

Fail-Safe System Description

CENDK1111101007

The fail-safe system is closely related to the self-diagnostic system.
When an abnormality occurs in a sensor signal, the ECM ignores the out-of-range signal and assumes a pre-programmed value for the failed sensors.
This allows the engine to continue running under the fail-safe condition.

Pre-Programmed Value for Fail-Safe System

Failed item	Pre-Programmed value
MAP sensor 1	• 150 – 758 mmHg / (5.9 – 30 inHg.) (The value will change according to the current engine speed.)
Air intake system	• The control is executed with the maximum engine speed of 2 000 r/min.
Cylinder temp. sensor	60 °C (140 °F)
IAT sensor	45 °C (113 °F)
Throttle position sensor	• The control is executed with the throttle opening at 5 degrees.

NOTE

There is no back-up system for the ECM itself. The engine will stop if it has failed.

Oil Change Reminder System Description

CENDK1111101008

This system informs the operator that it is time to change the ENGINE OIL based on the recommended maintenance schedule.
When the total motor operating hours has reached the pre-programmed hours, the caution lamp will flash, if the engine is running.
The above mentioned indication will repeat until the activated system is manually canceled.

NOTE

This system will activate up to 2 100 hour's operation.

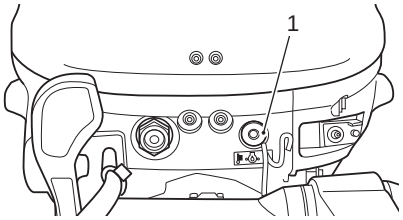

IDK111110025-01

1.	Caution lamp

Indication of System Activation

Caution lamp flashing pattern

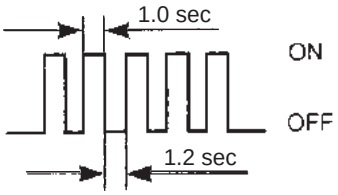

IDK111110004-01

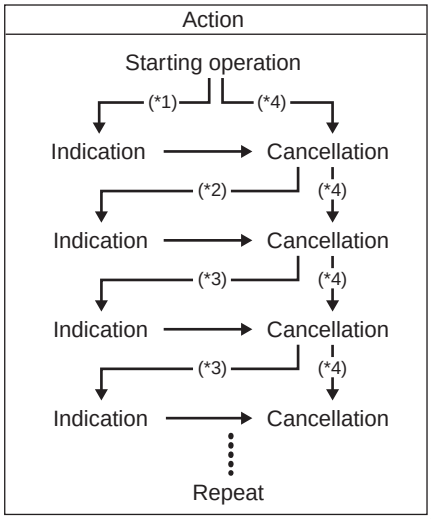

I9J011110010-03

*1:	Lapse of initial 20 hour's operation
*2:	Lapse of 80 hour's operation
*3:	Lapse of 100 hour's operation
*4:	When performing cancellation before system activation

Cancellation Procedure

1) Start the engine.
   Make sure that shift is in neutral and close the throttle fully.

NOTE

The engine stops when the engine stop button is kept to push than 0.5 seconds.

2) Push the engine stop button (1) three times within three seconds so that engine should not stall.
   The caution lamp is no longer lit when the reminder cancellation is successful.
3) Stop the engine.

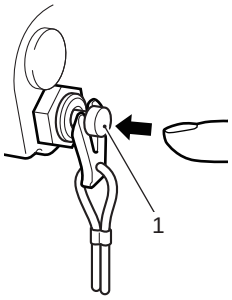

IDK111110026-01

NOTE

- **Cancellation of the system is possible whether or not the engine oil has been replaced.**
  Once the system has been activated, SUZUKI strongly recommends that the engine oil be replaced before canceling the system.
- **If the engine oil has been replaced with the system not activated, it is still necessary to perform the cancellation procedure to reset the Oil Change Reminder System.**

Component Location

Engine Control System Components / Engine Electrical Device Location

CENDK1111103001

Refer to “Wiring Harness Routing Diagram” in Section 4A (Page 4A-3).

Diagnostic Information and Procedures

Troubleshooting with Self-Diagnostic Code

CENDK1111104001

⚠ WARNING

Before troubleshooting, read and follow the “Precautions on Engine Control Diagnosis” (Page 1A-1).

In this section, troubleshooting procedures are based on the assumption that the “Low pressure fuel system” and “mechanical components (power unit, lower unit, etc.)” are normal.

Self-Diagnostic Code “3 – 4” MAP Sensor

CENDK1111104002

Wiring Diagram

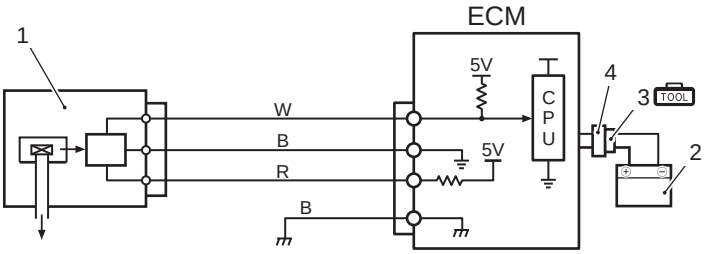

IDK111110011-01

1. MAP sensor	3. ECM power source cable
2. Battery	4. SDS communication connector

Troubleshooting

Step 1

1) Stop the engine.
2) Disconnect the MAP sensor connector.
3) Connect the ECM power source cable to the SDS communication connector and battery.
4) Check the voltage at the “R” wire terminal of the MAP sensor connector.

Is the voltage approx. 4 – 5 V?

Yes — Go to step 2.

No
- “R” wire open, “R” wire shorted to ground or a poor wire connection.
- If the wiring and connection is OK, substitute a known-good ECM and recheck.

Step 2

1) Check the MAP sensor output voltage change. Refer to “MAP Sensor Output Voltage Inspection” in Section 1C (Page 1C-11).

Is it in good condition?

Yes — Substitute a good ECM and recheck.

No
- Faulty MAP sensor.
- “R” wire shorted to “W” wire, “B” wire open, poor “B” wire connection, poor “W” wire connection, “W” wire open or poor MAP sensor connection.
- If the wiring and connection is OK, intermittent trouble or a faulty ECM may be the cause.

For step 1

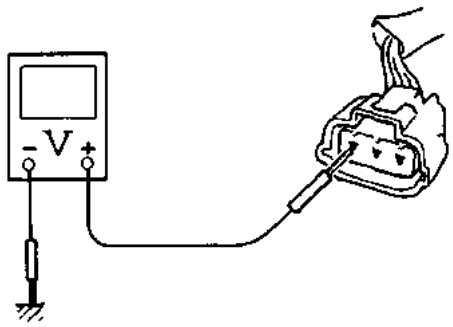

IDK111110033-01

Self-Diagnostic Code “1 – 4” Cylinder Temp. Sensor

CENDK1111104003

Wiring Diagram

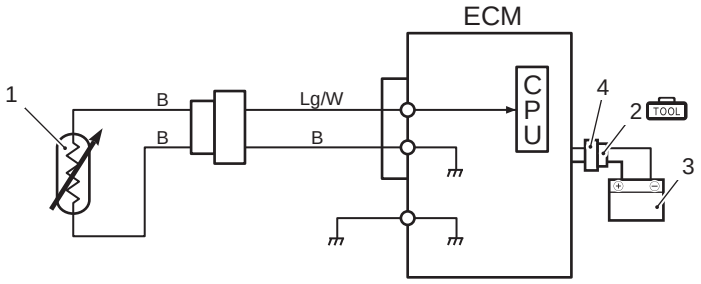

IDK111110012-02

1. Cylinder temp sensor	3. Battery
2. ECM power source cable	4. SDS communication connector

Troubleshooting

Step 1

1) Stop the engine.
2) Disconnect the cylinder temp. sensor connector.
3) Connect the ECM power source cable to the SDS communication connector and battery.
4) Check the voltage at the “Lg/W” wire terminal of the cylinder temp. sensor connector.

Is the voltage 4 V or more?

Yes Go to step 2.

No
- “Lg/W” wire shorted to the “B/W” wire or ground circuit.
- If the wiring is OK, substitute a known-good ECM and recheck.

Step 2

1) Disconnect the ECM power source cable.
2) Check the Cylinder temp. sensor.
   Refer to “Cylinder Temp. Sensor Inspection” in Section 1C (Page 1C-8).

Is it in good condition?

Yes Poor Cylinder Temp. sensor connection, intermittent trouble or a faulty ECM may be the cause.

No Faulty Cylinder Temp. sensor.

For step 1

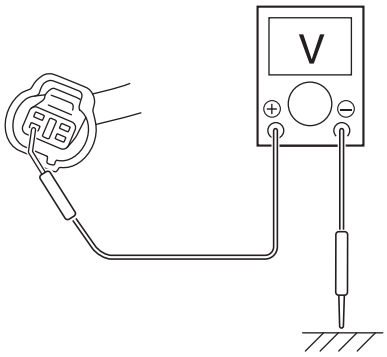

I9J011110045-02

Self-Diagnostic Code “2 – 3” IAT Sensor

CENDK1111104004

Wiring Diagram

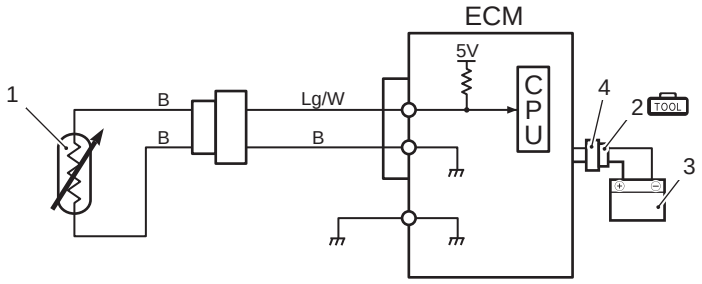

IDK111110013-02

1. IAT sensor	3. Battery
2. ECM power source cable	4. SDS communication connector

Troubleshooting

Step 1

1) Stop the engine.
2) Disconnect IAT sensor connector.
3) Connect the ECM power source cable to the SDS communication connector and battery.
4) Check the voltage at the “Lg/B” wire terminal of the IAT sensor connector.

Is the voltage 4 V or more?

Yes Go to step 2.

No
- “Lg/B” wire shorted to “B” wire or ground circuit.
- If the wiring is OK, substitute a known-good ECM and recheck.

Step 2

1) Disconnect the ECM power source cable.
2) Check the IAT sensor.
   Refer to “IAT Sensor Inspection” in Section 1C (Page 1C-8).

Is it in good condition?

Yes Poor IAT sensor connection, intermittent trouble or a faulty ECM may be cause.

No Faulty IAT sensor.

For step 1

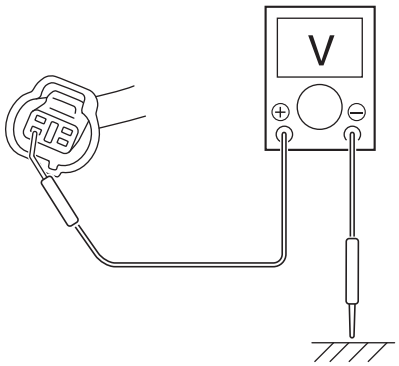

I9J011110046-01

Self-Diagnostic Code “4 – 2” CKP Sensor

CENDK1111104005

Wiring Diagram

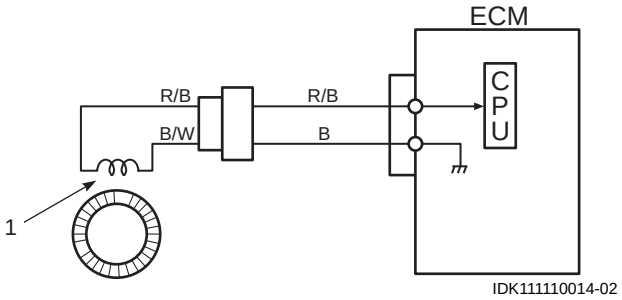

1. CKP sensor

Troubleshooting

Step 1

1) Check the CKP sensor air gap.
   Refer to “CKP Sensor Removal and Installation” in Section 1C (Page 1C-6).

Is it in good condition?

Yes Go to step 2.

No Incorrectly adjusted air gap.

Step 2

1) Check the CKP sensor resistance.
   Refer to “Resistance Check” in Section 1C (Page 1C-5).

Is it in good condition?

Yes Open wire between the CKP sensor and the ECM, poor lead wire connection or sensor lead wires are shorted to each other. If lead wire and connection are ok, intermittent trouble or a faulty ECM may be the cause.

No Faulty CKP sensor.

Self-Diagnostic Code “2 – 4” CMP Sensor

CENDK1111104006

Wiring Diagram

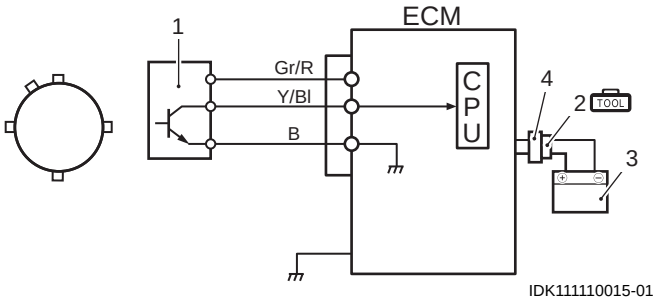

1. CMP sensor	3. Battery
2. ECM power source cable	4. SDS communication connector

Troubleshooting

Step 1

Is CMP sensor installed properly and the wire harness connected securely?

Yes Go to step 2.

No Correct.

Step 2

1) Stop the engine.
2) Disconnect the connector from the CMP sensor.
3) Connect the ECM power source cable to the SDS communication connector and battery.
4) Check for proper connection to the CMP sensor at “Gr/R”, “Y/Bl” and “B” wire terminals.
5) If OK, check the voltage at the “Gr/R”, “Y/B” and “B” wire terminals of the CMP sensor connector.

CMP sensor voltage
Terminal “Gr/R”: 10 – 14 V
Terminal “Y/Bl”: 4 – 5 V
Terminal “B”: 0 V

Is the voltage satisfactory?

Yes Go to step 5.

No Go to step 3.

Step 3

Was terminal “Y/Bl” voltage in step 2 within specification?

Yes Go to step 4.

No “Y/Bl” wire open or shorted to ground / power supply circuit. If the wiring and connection is OK, substitute a known-good ECM and recheck.

Step 4

Was terminal “Gr/R” voltage in step 2 within specification?

Yes Go to step 5.

No “Gr/R” wire open circuit. If the wiring and connection is OK, substitute a known-good ECM and recheck.

Step 5

1) Disconnect the ECM power source cable.
2) Check the CMP sensor and sensor trigger vane. Refer to “CMP Sensor Inspection” in Section 1C (Page 1C-9).

Is check result satisfactory?

Yes Substitute a known-good ECM and recheck.

No Replace CMP sensor.

For step 2

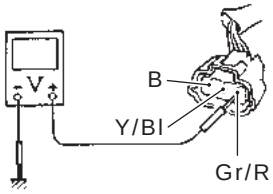

Self-Diagnostic Code “2 – 2” Air Intake System

CENDK1111104007

Wiring Diagram

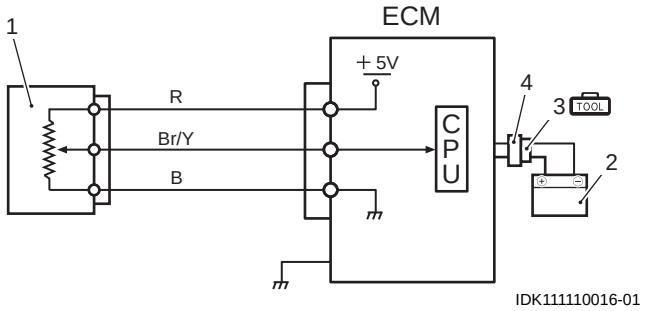

1. TPS	3. ECM power source cable
2. Battery	4. SDS communication connector

Troubleshooting

Step 1

1) Stop the engine.
2) Disconnect the TPS connector.
3) Connect the ECM power source cable to the SDS communication connector and battery.
4) Check the voltage at the “R” wire terminal of TPS connector.

Is the voltage approx. 4 – 5 V?

Yes — Go to step 2.

No
- “R” wire open, “R” wire shorted to ground circuit or poor wire connection.
- If the wiring and connection is OK, substitute a known-good ECM and recheck.

Step 2

1) Check the TPS output voltage change.
Refer to “TPS Inspection” in Section 1C (Page 1C-12).

Is it in good condition?

Yes — Go to step 3.

No
- Faulty TPS.
- “R” wire shorted to “Br/Y” wire, “B” wire open, poor “B” wire connection, poor “Br/Y” wire connection, “Br/Y” wire open or poor TPS connection.
- If the wiring and connection is OK, intermittent trouble or a faulty ECM may be the cause.

Step 3

1) Check the MAP sensor, IAC system and intake manifold (system) for air leakage.

Is the result OK?

Yes — Intermittent trouble or faulty ECM. Substitute a known-good ECM and recheck.

No — Faulty air intake system.

For step 1

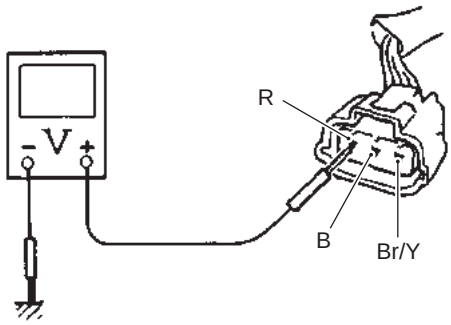

Self-Diagnostic Code “3 – 2” MAP Sensor 2

CENDK1111104008

Wiring Diagram

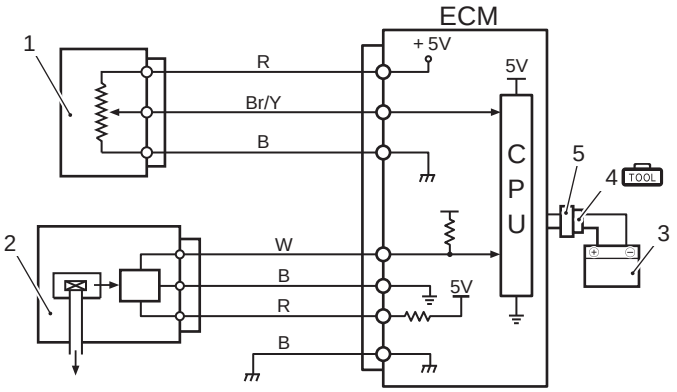

IDK111110017-01

1. TPS	4. ECM power source cable
2. MAP sensor	5. SDS communication connector
3. Battery	

Troubleshooting

Step 1

1) Stop the engine.
2) Disconnect the MAP sensor connector.
3) Connect the ECM power source cable to the SDS communication connector and battery.
4) Check the voltage at the “R” wire terminal of the MAP sensor connector.

Is the voltage approx. 4 – 5 V?

Yes Go to step 2.

No
- “R” wire open, “R” wire shorted to ground circuit or poor wire connection.
- If the wiring and connection is OK, substitute a known-good ECM and recheck.

Step 2

1) Check the MAP sensor output voltage change. Refer to “MAP Sensor Output Voltage Inspection” in Section 1C (Page 1C-11).

Is it in good condition?

Yes Go to step 3.

No Faulty MAP sensor.

Step 3

1) Disconnect the TPS connector.
2) Check the voltage at the “R” wire terminal of the TPS connector.

Is the voltage approx. 4 – 5 V?

Yes Go to step 4.

No
- “R” wire open, “R” wire shorted to ground circuit or poor wire connection.
- If the wiring and connection is OK, substitute a known- good ECM and recheck.

Step 4

1) Check the TPS output voltage change. Refer to “TPS Inspection” in Section 1C (Page 1C-12).

Is it in good condition?

Yes Intermittent trouble, substitute a known-good ECM and recheck.

No
- Faulty TPS.
- “R” wire shorted to “Br/Y” wire, “B” wire open, poor “B” wire connection, poor “Br/Y” wire connection, “Br/Y” wire open or poor TPS connection.
- If the wiring and connection is OK, intermittent trouble or a faulty ECM may be the cause.

For step 1

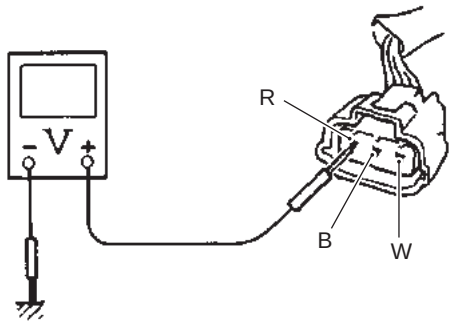

IDK111110027-03

Self-Diagnostic Code “4 – 3” Fuel Injector

CENDK1111104009

Wiring Diagram

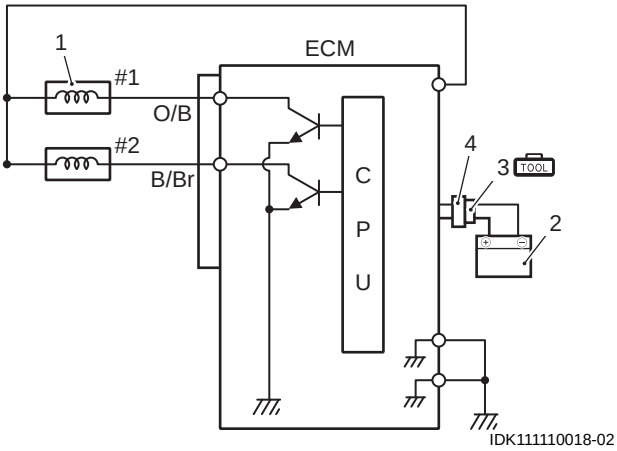

1. Fuel injector	3. ECM power source cable
2. Battery	4. SDS communication connector

Troubleshooting

Step 1

1) Using a sound scope, check that each injector has an operating sound when the engine is cranking.

Do all injectors make an operating sound?

Yes — Fuel injector and its circuit are in good condition.

No — Go to step 2.

Step 2

1) Check the fuel injector, the wiring connection and the wire harness of the fuel injector not making the operating sound.

Are all of the above OK?

Yes — Substitute a known-good ECM and recheck.

No — Faulty injector or its circuit.

Step 3

1) Stop the engine.
2) Disconnect the connector from the fuel injector.
3) Connect the ECM power source cable to the SDS communication connector and battery.
4) Check the voltage at “Gr/R” wire terminal.

Is the voltage 12 V (battery voltage)?

Yes — Go to step 4.

No — Power circuit open.

Step 4

1) Disconnect the ECM power source cable.
2) Disconnect the ECM connector, and check all of the injectors for resistance.
   Refer to “Resistance Check” in Section 1C (Page 1C-5).

Is the resistance 10 – 14 Ω for each injector?

Yes — Substitute a known-good ECM and recheck.

No — Faulty injector or its circuit.

For step 3

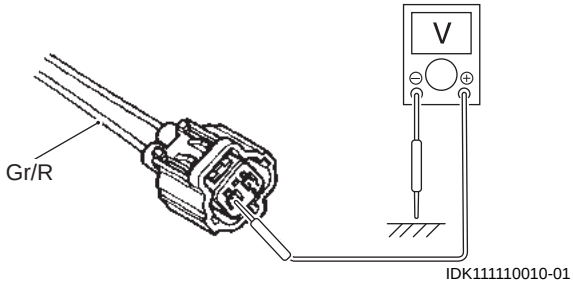

Self-Diagnostic Code “2 – 1” TPS (Throttle Position Sensor)

CENDK1111104010

Wiring Diagram

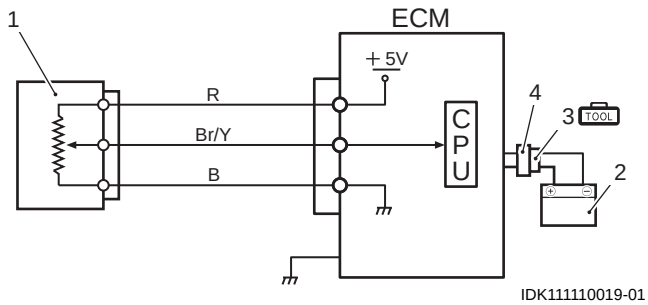

1. TPS	3. ECM power source cable
2. Battery	4. SDS communication connector

Troubleshooting

Step 1

1) Stop the engine.
2) Disconnect TPS connector.
3) Connect the ECM power source cable to the SDS communication connector and battery.
4) Check the voltage at the “R” wire terminal of the TPS connector.

Is the voltage approx. 4 – 5 V?

Yes — Go to step 2.

No
- “R” wire open, “R” wire shorted to ground circuit or poor connection.
- If the wiring and connection is OK, substitute a known-good ECM and recheck.

Step 2

1) Check the TPS output voltage change.
Refer to “TPS Inspection” in Section 1C (Page 1C-12).

Is it in good condition?

Yes — Substitute a known-good ECM and recheck.

No
- Faulty TPS.
- “R” wire shorted to “Br/Y” wire, “B” wire open, poor “B” wire connection, poor “Br/Y” wire connection, “Br/Y” wire open or poor TPS connection.
- If the wiring and connection is OK, intermittent trouble or a faulty ECM may be the cause.

Self-Diagnostic Code “1 – 1” Rectifier / Regulator (Over Charging)

CENDK1111104011

NOTE

It is difficult to thoroughly check the rectifier / regulator. Before replacing it with new one, check that the ground point has good electrical contact.

Troubleshooting

Step 1

1) Check the rectifier / regulator resistance.
Refer to “Rectifier / Regulator Inspection” in Section 1K (Page 1K-16).

Is the result OK?

Yes — Go to step 2.

No — Faulty rectifier / regulator.

Step 2

1) With the engine running, check charging voltage at idle speed.

Is the result 16 V or higher?

Yes — Faulty rectifier / regulator.

No — Faulty ECM or wire continuity / connection failure.

Self-Diagnostic Code “5 – 3” Oil Pressure Switch

CENDK1111104012

Wiring Diagram

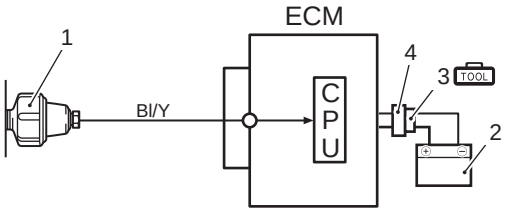

IDK111110020-01

1. Oil pressure switch	3. ECM power source cable
2. Battery	4. SDS communication connector

Troubleshooting

Step 1

1) Stop the engine.
2) Remove the oil pressure switch wire at switch.
3) Connect the ECM power source cable to the SDS communication connector and battery.
4) Check the voltage between the oil pressure switch wire terminal and body ground.

Is the voltage approx. 5 V?

Yes — Go to step 2.

No
- Oil pressure switch wire open or poor connection.
- If wire and connection are OK, substitute a known-good ECM and recheck.

Step 2

1) Disconnect the ECM power source cable.
2) Check the oil pressure switch operation. Refer to “Oil Pressure Switch Inspection” in Section 1E (Page 1E-5).

Is it in good condition?

Yes — Poor oil pressure switch wire connection, intermittent trouble or a faulty ECM may be the cause.

No — Faulty oil pressure switch.

For step 1

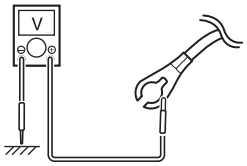

I9J011110064-01

Troubleshooting Without Self-Diagnostic Code

CENDK1111104013

Before troubleshooting, make sure that there is not a self-diagnostic code indication.

Condition	Possible cause	Correction / Reference item
Unstable idling / trolling (or engine tends to stall)	Clogged MAP sensor vacuum passage.	*Check the vacuum passage.*
	Malfunctioning TPS.	*Check the TPS sensor.*
	Faulty IAC system.	*Check the IAC system.*
	Fuel pressure out of specification.	*Check the fuel pressure.*
	Faulty injector or its circuit.	*Check the injector and its circuit.*
	Poor performance of the IAT sensor, TPS or MAP sensor.	*Check each sensor.*
	Faulty ECM.	*Replace.*
	Faulty spark plug.	*Replace.*
	Faulty ignition coil or its circuit.	*Check the ignition coil and its circuit.*

IAC System Troubleshooting

CENDK1111104014

Wiring Diagram

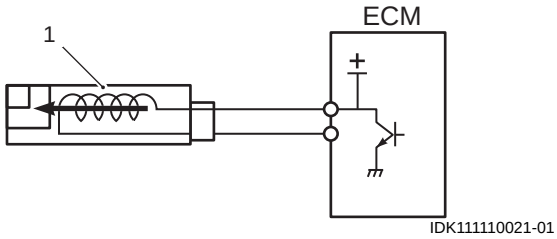

1. IAC valve

Troubleshooting

Step 1

1) Warm up the engine to normal operating temperature and keep it idling.
2) Using the SDS tool, check the IAC duty cycle and idle speed. Adjust if necessary.

   <u>Idle speed (IAC duty cycle)</u>
   800 – 900 r/min (approx. 10%)

Is result OK?

Yes — IAC system is in good condition.

No — Go to step 2.

Step 2

1) Disconnect the IAC connector at IAC valve.
2) Check the resistance between terminals.

Is the resistance 31 – 42 Ω?

Yes — Proceed to “Unstable Idling / Trolling” in “Troubleshooting Without Self-Diagnostic Code” (Page 1A-24) and check items except for “Faulty IAC system”.

No
- Faulty IAC valve.
- Poor connection.
- Open wire harness.

Service Instructions

How to Use The 26 Pin Test Cord

CENDK1111106003

This test cord is used when checking a circuit for voltage, etc. and is connected between the ECM and the wiring harness.
To take a measurement, connect the tester probe to the relevant terminal of the test cord.

Special tool
TOOL (A): 09930–88940 (26-pin test cord)

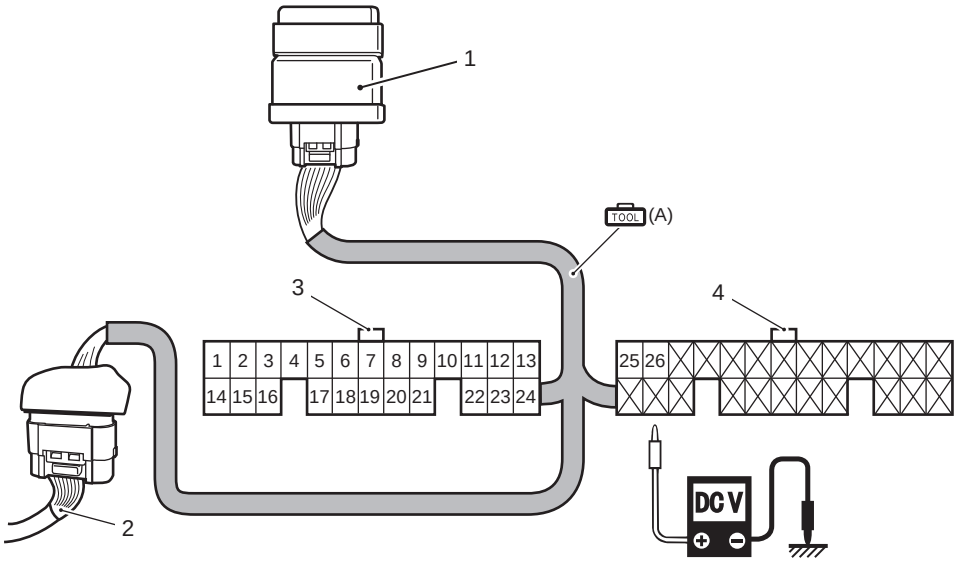

IDK111110028-01

1. ECM	2. Wire harness	3. White connector	4. Black connector

Inspection of The ECM and Its Circuit

CENDK1111106004

NOTICE

If you connect a voltmeter or ohmmeter directly to ECM terminals by removing ECM connector, you can damage the control module.

Never connect a voltmeter or an ohmmeter directly to any terminal of ECM by disconnecting control module connector.

Special tool

TOOL (A): 09930–88940 (26-pin test cord)
TOOL (B): 09933–08910 (ECM power source cable)
TOOL (C): 09930–99320 (Digital tester)

Tester knob indication
DCV

1) Stop the engine.
2) Connect the 26-pin test cord between the ECM and wire harness as shown in figure.

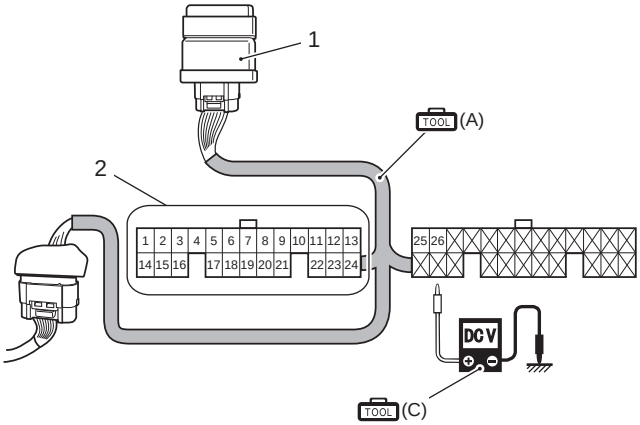

IDK111110029-01

1. ECM	2. White connector

3) Connect the ECM power source cable to the SDS communication connector (1) and battery as shown figure.

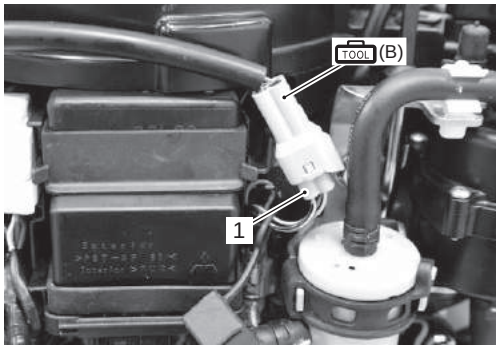

IDK111110030-03

4) Connect the tester probe (“–”, Black) to body ground, and measure the voltage according to the “Circuit Voltage Table” (Page 1A-28).

Circuit Voltage Table
Electric starter model

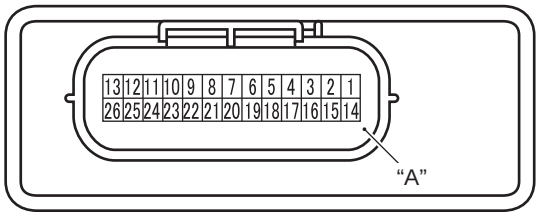

IDK111110007-01

"A": ECM terminal

Terminal	Wire color	Circuit	Standard voltage	Condition / Remarks
1	O	Ignition coil	—	—
2	O/B	No.1 Fuel injector	Approx. 12 V	• 12 V electric power is supplied to ECM.
3	B/Y	High pressure fuel pump (V)	Approx. 0.6 V	• 12 V electric power is supplied to ECM.
4	B/R	High pressure fuel pump (W)	Approx. 0.6 V	• 12 V electric power is supplied to ECM.
5	B/W	High pressure fuel pump (U)	Approx. 0.6 V	• 12 V electric power is supplied to ECM.
6	Bl/Y	Oil pressure switch	—	—
7	B	Ground for ECM	—	—
8	Y/G	Neutral switch	Approx. 0 V	• 12 V electric power is supplied to ECM. • Shift into Neutral
			Approx. 4.7 V	• 12 V electric power is supplied to ECM. • Shift into Forward or Reverse
9	Gr/R	Power output	Approx. 8 V	• 12 V electric power is supplied to ECM. • While cranking engine with starter motor.
			Approx. 12 V	• 12 V electric power is supplied to ECM.
10	Br/Y	Throttle position sensor	Approx. 0.7 V	• 12 V electric power is supplied to ECM. • Throttle FCT
			Approx. 4 V	• 12 V electric power is supplied to ECM. • Throttle WOT
11	P/B	Battery relay	—	—
12	R	Power for sensor (5V)	Approx. 5 V	• 12 V electric power is supplied to ECM.
13	W	DC power for ECM	Approx. 8 V	• While cranking engine with starter motor.
14	B	Ground for ECM power	—	—
15	B/Br	No.2 Fuel injector	Approx. 12 V	• 12 V electric power is supplied to ECM.
16	P	Diag LED	—	—
17	W/B	IAC valve	Approx. 0 V	• 12 V electric power is supplied to ECM.
18	Y/B	Tachometer	—	—
19	Y	Communication line (B)	—	—
20	O/Y	Communication line (A)	—	—
21	Bl/R	Emergency stop switch	Approx. 5 V	• 12 V electric power is supplied to ECM. • Stop switch plate IN.
			Approx. 0 V	• 12 V electric power is supplied to ECM. • Stop switch plate OUT.
22	Lg/B	IAT sensor	0.04 – 4.6 V	• 12 V electric power is supplied to ECM.
23	W	MAP sensor	0.79 – 4.2 V	• 12 V electric power is supplied to ECM.
24	Lg/W	Cylinder temp. sensor	0.14 – 4.75 V	• 12 V electric power is supplied to ECM.
25	Y/Bl	CMP sensor	Approx. 0.3 V or 5 V	• 12 V electric power is supplied to ECM.
26	R/B	CKP sensor	—	—

Manual starter model

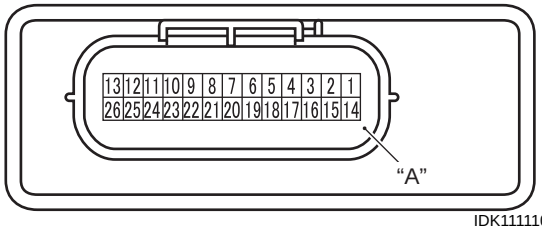

IDK111110007-01

"A": ECM terminal

Terminal	Wire color	Circuit	Standard voltage	Condition / Remarks
1	O	Ignition coil	—	—
2	O/B	No.1 Fuel injector	Approx. 12 V	• 12 V electric power is supplied to ECM.
3	B/Y	High pressure fuel pump (V)	Approx. 0.6 V	• 12 V electric power is supplied to ECM.
4	B/R	High pressure fuel pump (W)	Approx. 0.6 V	• 12 V electric power is supplied to ECM.
5	B/W	High pressure fuel pump (U)	Approx. 0.6 V	• 12 V electric power is supplied to ECM.
6	Bl/Y	Oil pressure switch	—	—
7	B	Ground for ECM	—	—
8	Y/G	Neutral switch	Approx. 0 V	• 12 V electric power is supplied to ECM. • Shift into Neutral
			Approx. 4.7 V	• 12 V electric power is supplied to ECM. • Shift into Forward or Reverse
9	Gr/R	Power output	Approx. 12 V	• 12 V electric power is supplied to ECM.
10	Br/Y	Throttle position sensor	Approx. 0.7 V	• 12 V electric power is supplied to ECM. • Throttle FCT
			Approx. 4 V	• 12 V electric power is supplied to ECM. • Throttle WOT
11	Br/W	AC power No.2 for ECM	Approx. 0.5 – 1.0 V	• Disconnect ECM power source cable. • Crank the engine.
12	R	Power for sensor (5V)	Approx. 5 V	• 12 V electric power is supplied to ECM.
13	Br/R	AC power No.1 for ECM	Approx. 0.5 – 1.0 V	• Disconnect ECM power source cable. • Crank the engine.
14	B	Ground for ECM power	—	—
15	B/Br	No.2 Fuel injector	Approx. 12 V	• 12 V electric power is supplied to ECM.
16	P	Diag LED	—	—
17	W/B	IAC valve	Approx. 0 V	• 12 V electric power is supplied to ECM.
18	Y/B	Tachometer	—	—
19	Y	Communication line (B)	—	—
20	O/Y	Communication line (A)	—	—
21	Bl/R	Emergency stop switch	Approx. 5 V	• 12 V electric power is supplied to ECM. • Stop switch plate IN.
			Approx. 0 V	• 12 V electric power is supplied to ECM. • Stop switch plate OUT.
22	Lg/B	IAT sensor	0.04 – 4.6 V	• 12 V electric power is supplied to ECM.
23	W	MAP sensor	0.79 – 4.2 V	• 12 V electric power is supplied to ECM.
24	Lg/W	Cylinder temp. sensor	0.14 – 4.75 V	• 12 V electric power is supplied to ECM.
25	Y/Bl	CMP sensor	Approx. 0.3 V or 5 V	• 12 V electric power is supplied to ECM.
26	R/B	CKP sensor	—	—

ECM Removal and Installation

CENDK1111106001

Removal

1) Disconnect lead wire connector from ECM (1).
2) Remove the ECM.

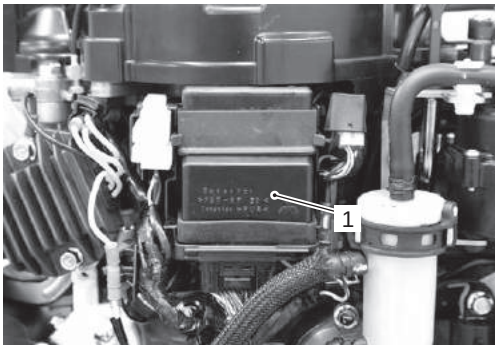

IDK111110031-02

Installation

Installation is reverse order of removal.

Caution Lamp Inspection

CENDK1111106002

Check for illumination of the caution lamp using the following procedures.

1) Disconnect lamp lead wire connector from engine harness.

NOTICE

Failure to correctly supply the voltage will result in lamp damage.

Do not use battery larger than 2 V to test the lamp.

2) For tests using 1.5 V power source (or battery), connect the lamp lead wire to the 1.5 V power source (or battery) as shown below.
   - Pink lead wire to Battery (+)
   - Black lead wire to Battery (–)

   When 1.5 V applied
   Lamp ON

   If out of specification, replace the caution lamp.

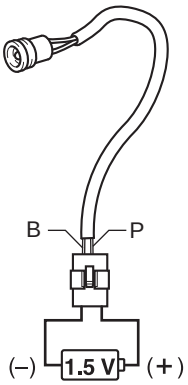

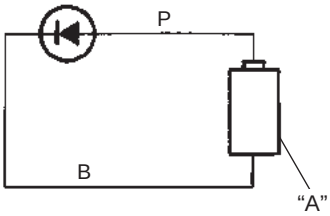

IDK111110022-02

"A": 1.5 V battery

Engine Electrical Devices

Precautions

Precaution for Engine Electrical Device

CENDK1111300001

Refer to “General Precautions” in Section 00 (Page 00-1) and “Precautions on Engine Control Diagnosis” in Section 1A (Page 1A-1).

General Description

Sensor and Switch Description

CENDK1111301001

CKP Sensor

- There is one CKP sensor installed on the stator base. When the reluctor bars on the flywheel pass the sensor, a signal (voltage pulse) is generated and sent to the ECM. This is the fundamental signal used to judge engine speed and crankshaft angle.
- There are 34 reluctor bars. They are located 10 degrees apart, except at one position where it is 30 degrees apart.
  During one crankshaft rotation, 34 signals are input to the ECM.
- **Failure Symptom:**
  Without the CKP sensor signal input, the ECM does not output the ignition and fuel injection signals.

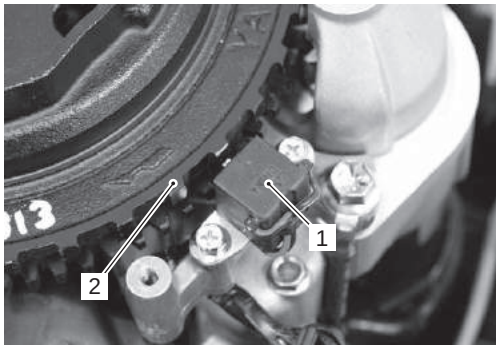

IDK111130020-02

1. CKP sensor	2. Reluctor bar

CMP Sensor

- The CMP sensor is mounted on the cylinder head. When the trigger vanes on the cam pulley passes the sensor, a voltage signal is generated and sent to the ECM as pulse signal.
  This sensor is used to detect piston position.
- Signals received from this sensor are also used by the ECM to determine sequential fuel injection.
  The six cam pulley trigger vanes provide six high voltage signals from the CMP sensor to the ECM during one camshaft rotation (two rotations of crankshaft).
- **Failure symptom:**
  Without the CMP sensor signal input, the ECM does not output the ignition and fuel injection signals.

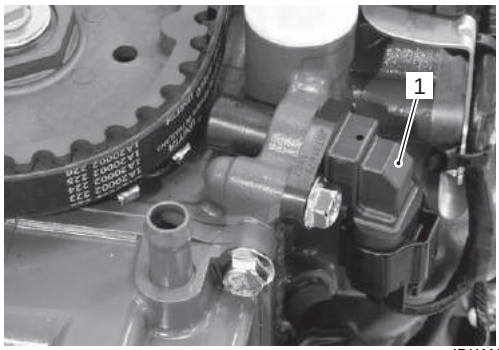

IDK111130021-02

1. CMP sensor

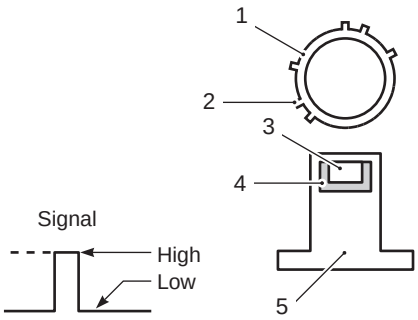

IDK111130008-01

1. Camshaft (Cam pulley)	4. Magnet
2. Trigger vane	5. CMP sensor
3. Magnet resistive semiconductor	

- **ECM cylinder identification:**
  The cylinders are identified by a calculation of two signals; one from the CKP sensor and one from the CMP sensor.

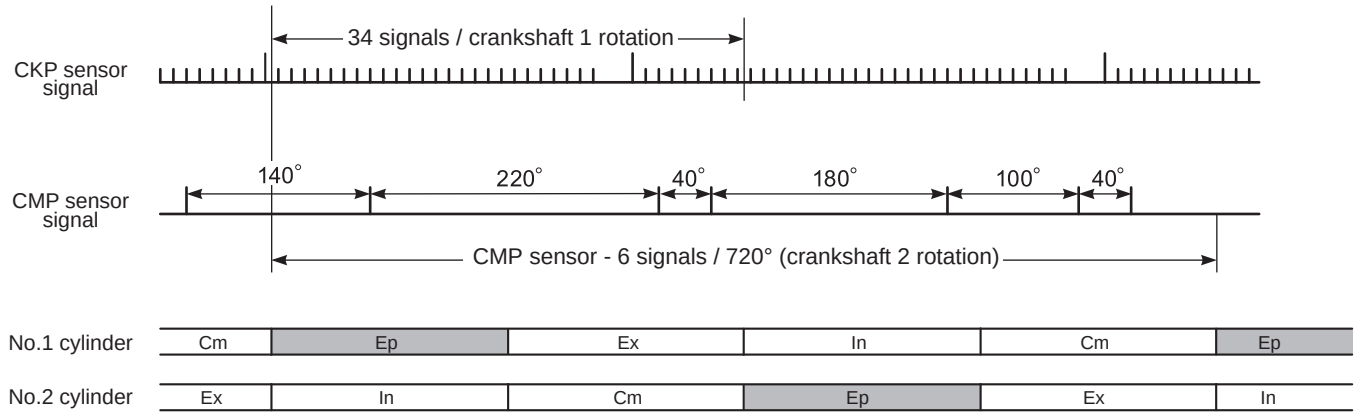

Cm.: Compression, Ep.: Explosion, Ex.: Exhaust, In.: Intake,

IDK111130001-01

Cylinder Temperature Sensor

The cylinder temperature sensor is installed on the cylinder (top side) and is used to detect the cylinder temperature.

This is a thermistor type sensor (resistance of which changes depending on temperature) and inputs a signal to the ECM as a voltage value. This signal is used to compensate the fuel injection duration, ignition timing, etc.

This sensor is also used to detect engine over-heat as the ECM detects both the temperature and temperature change rate (gradient temp.-temperature rise vs. time).

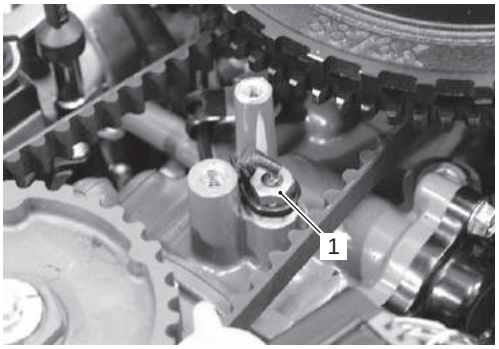

IDK111130022-02

1. Cylinder temp. sensor

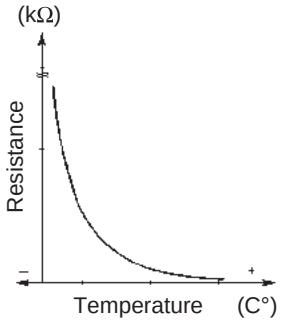

I9J011130003-02

IAT Sensor

The IAT sensor is installed on the air intake silencer case and is used to detect the intake air temperature.

This sensor is the same type as the cylinder temperature sensor, and inputs a signal to the ECM as a voltage value.

This signal is used to compensate the fuel injection duration.

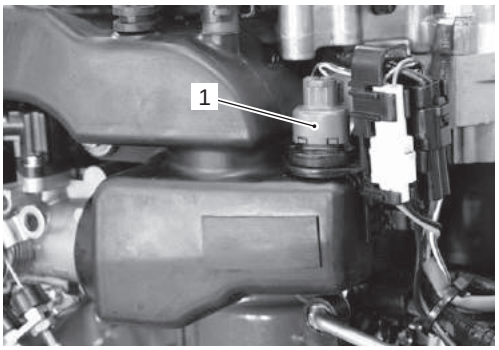

IDK111130023-02

1. IAT sensor

MAP Sensor

The MAP sensor is installed on the intake manifold and used to detect the intake manifold pressure.
This sensor inputs the intake manifold pressure to the ECM as a voltage value.
This input signal is used as the fundamental signal to determine fuel injection duration, ignition timing, etc.

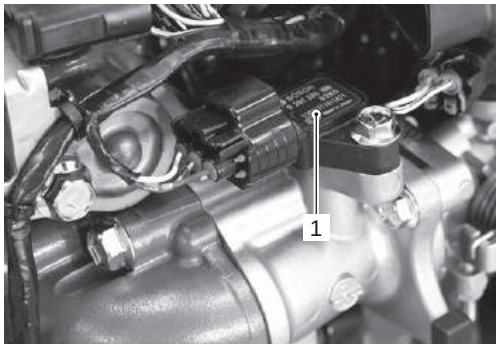

IDK111130024-03

1. MAP sensor

Throttle Position Sensor (TPS)

The TPS is installed on the throttle body and detects the degree of throttle opening. The throttle shaft is interlocked with the TPS shaft.
This sensor is a variable resistor, changing resistance (Ohms) in accordance with the throttle opening.
The varying resistance value is converted to voltage and input to the ECM.
Based on the TPS voltage, the ECM calculates the idle and throttle opening position to determine the control modes of the various controls systems (Idle air control, fuel injection control system, etc.).

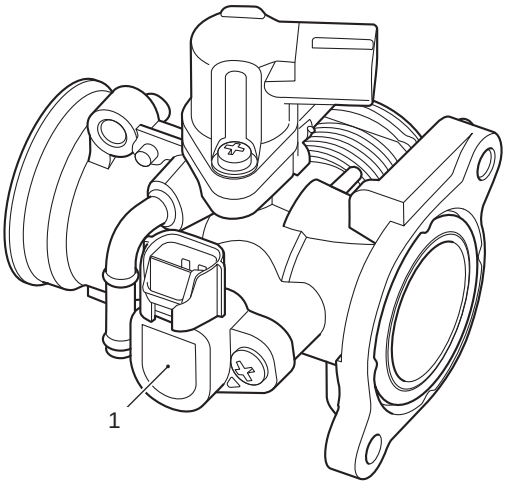

IDK111130009-01

1. TPS

Neutral Switch

The neutral switch is installed on the cylinder block (PORT side) and is used to detect the shift position.
This switch is “ON” in neutral and “OFF” in forward or reverse.
The ECM performs the following controls based on the neutral switch signal:

- Fuel injection and ignition are not performed when the shift is in forward or reverse at the time of engine start. (Start-in-gear protection. Refer to “Start-In-Gear Protection System Description” in Section 1I (Page 1I-1).)
- When the shift lever is in neutral, fuel injection is controlled so that the engine speed does not exceed 3000 r/min.
- After shifting into forward or reverse from neutral, the IAC valve is controlled to increase intake air to prevent unstable engine idle or stalling.

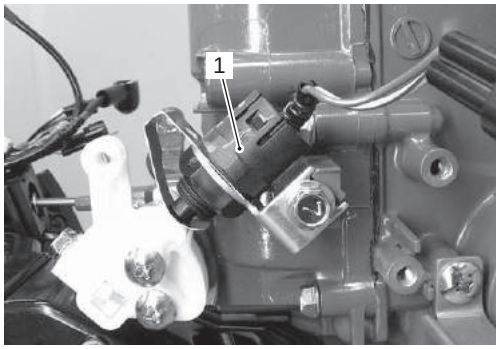

IDK111130025-02

1. Neutral switch

Emergency Stop Switch

When the cord from the plate of the switch is secured to the operator, the plate will be pulled off if the operator is suddenly thrown overboard.
The circuit of emergency stop switch will be closed when the plate is removed.
Then the ECM does not provide fuel injector operating signal, ignition signal and fuel pump operating signal.

Failure Symptoms

A switch short circuit will not allow the motor to start.

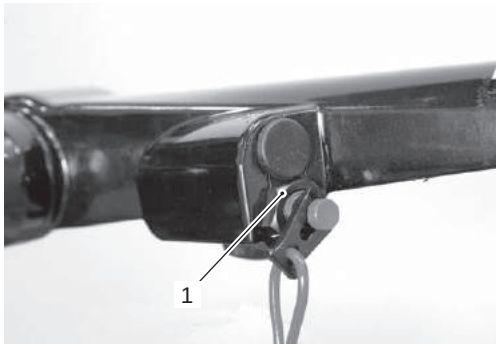

IDK111130026-02

1. Emergency stop switch

Battery Relay
(for electric start models)

The battery relay is installed in the electric parts holder. The relay is turned on when ECM detects 6 volts or more as a battery voltage after engine starting, and a charging circuit is formed which supplies charging current to the battery.
If the battery voltage decreases to less than 6 volts while operating the engine, the battery relay is turned off.

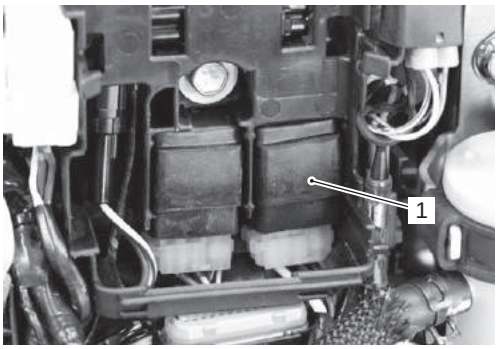

IDK111130027-02

1. Battery relay	

ECM Power Source

CENDK1111301002

Manual Starter Model

The AC output to which electricity is generated by the ECM power source coil is input through No.13 and No.14 terminal to the ECM.
The AC output is rectified to the DC power in ECM, and it is supplied to the engine control system.

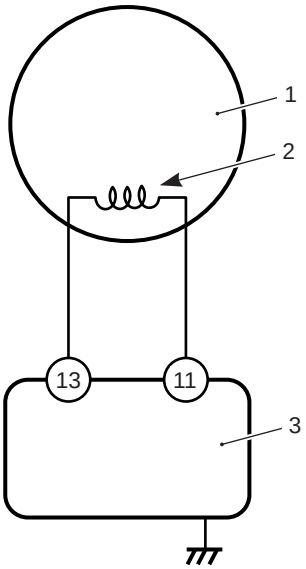

IDK111130003-01

1. Flywheel	3. ECM
2. ECM power source coil	

Electric Starter Model

The AC output from the battery charge coil is rectified to DC power by the rectifier / regulator. The DC power inputs to ECM through ECM No.13 terminal, and it is supplied to the engine control system.

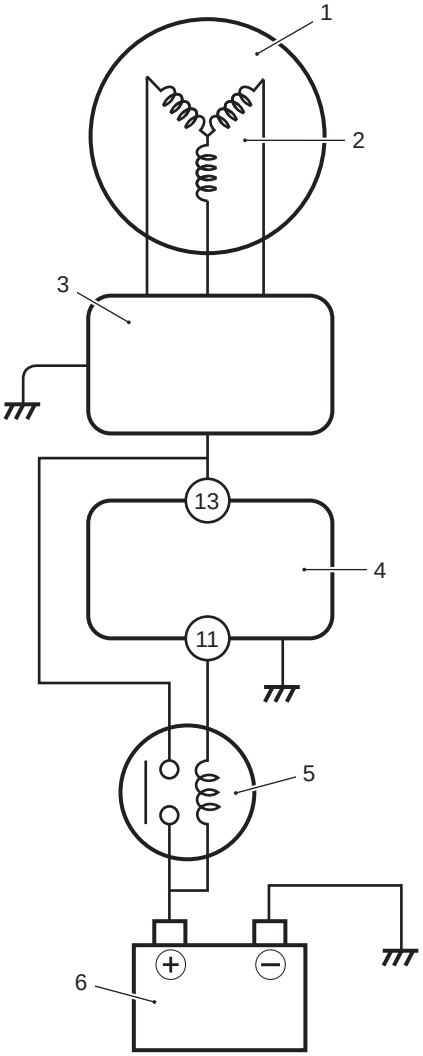

IDK111130004-01

1. Flywheel	4. ECM
2. Battery charge coil	5. Battery relay
3. Rectifier / Regulator	6. Battery

Component Location

Location of Sensor and Switch

CENDK1111303001

Refer to “Wiring Harness Routing Diagram” in Section 4A (Page 4A-3).

Service Instructions

Resistance Check

CENDK1111306001

Special tool

TOOL : 09930–99320 (Digital tester)

Tester knob indication

Resistance (Ω)

1) Stop the engine.
2) Disconnect battery cables from battery.
3) Disconnect wire harness connector from ECM.
4) Connect the tester probes to terminal (wire harness side) and measure resistance according to the “Resistance Table” (Page 1C-5).

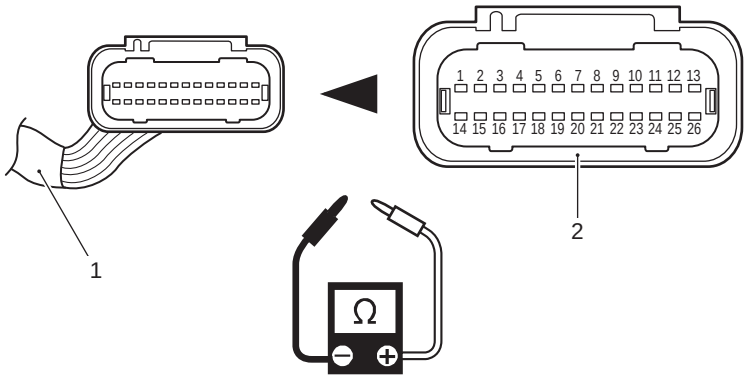

IDK111130005-01

1. Engine main wire harness	2. Black connector

Resistance Table

Circuit	Terminal for tester probe connection	Standard resistance (at 20 °C)
ECM Power source coil (Manual starter model)	13 (Br/R) to 11 (Br/W)	2.1 – 3.2 Ω
CKP sensor	26 (R/B) to 7 (B)	148 – 222 Ω
Fuel injector No.1	2 (O/B) to 9 (Gr/R)	10 – 14 Ω
Fuel injector No.2	15 (B/Br) to 9 (Gr/R)	
IAC Valve	17 (W/B) to 9 (Gr/R)	31 – 42 Ω
IAT sensor	22 (Lg/B) to 7 (B)	0 ° C (32 °F): 5.3 – 6.6 kΩ 25 ° C (77 °F): 1.8 – 2.3 kΩ 50 ° C (122 °F): 0.73 – 0.96 kΩ 75 ° C (135 °F): 0.33 – 0.45 kΩ (Thermistor characteristic)
Cylinder temperature sensor	24 (Lg/W) to 7 (B)	

ECM Power Source Coil Peak Voltage Inspection

CENDK1111306002

Applicable model: Manual starter model

Special tool

CD-77 : Stevens peak reading voltmeter CD-77

Tester knob indication
POS 50

1) Disconnect the wire harness connector from ECM.
2) Connect the tester probe ("–", Black) to No.11 terminal as shown in figure.
3) Connect the tester probe ("+", Red) to No.13 terminal.

Tester probe connection	
Red (+)	**Black (–)**
No.13 (Br/R)	No.11 (Br/W)

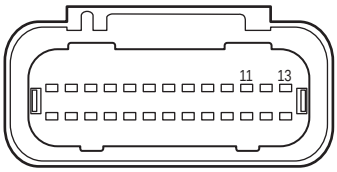

IDK111130006-01

4) Remove the all spark plugs.
5) Crank with the recoil starter, then measure voltage.

   ECM power source coil peak voltage
   16 V or over

6) If measurement is out of specification, check wire harness for open and short.
   If wire harness is in good condition, replace the ECM power source coil.

ECM Power Source Coil Removal and Installation

CENDK1111306003

Applicable model: Manual starter model

Refer to "ECM Power Source Coil / Battery Charge Coil / CKP Sensor / Stator Base Removal and Installation" in Section 1K (Page 1K-10).

CKP Sensor Peak Voltage Inspection

CENDK1111306004

Special tool

CD-77 : Stevens peak reading voltmeter CD-77

Tester knob indication
SEN 5

1) Disconnect the wire harness connector from ECM.
2) Connect the tester probe ("–", Black) to No.7 terminal (or to body ground) as shown in figure.
3) Connect the tester probe ("+", Red) to No.26 terminal.

Tester probe connection	
Red (+)	**Black (–)**
No.26 (R/B)	No.7 (B)

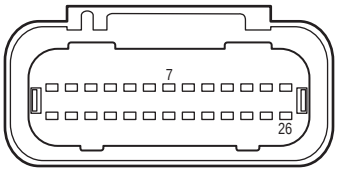

IDK111130007-01

4) Remove all spark plugs.
5) Crank with the recoil starter, then measure voltage.

   CKP sensor peak voltage
   1 V or over

6) If measurement is out of specification,
   - 1st, check CKP sensor air gap
   - 2nd, check wire harness for open and short.

   If wire harness and air gap are in good condition, replace CKP sensor and recheck.

CKP Sensor Removal and Installation

CENDK1111306005

Refer to "Battery Charge Coil / CKP Sensor / Stator Base Removal and Installation" in Section 1K (Page 1K-5).

Cylinder Temp. Sensor Removal and Installation

CENDK1111306006

Removal

1) Remove the recoil starter.
   Refer to “Recoil Starter Removal and Installation” in Section 1J (Page 1J-3).
2) Disconnect lead wire connector from ECM (1), then remove ECM.

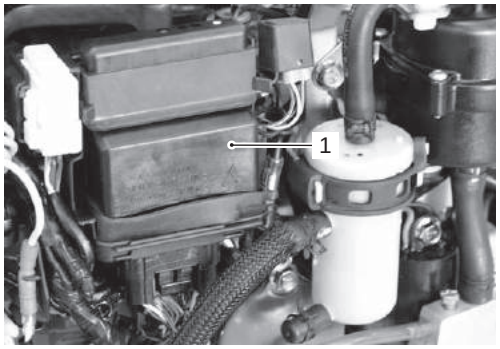

IDK111130028-02

3) Disconnect the cylinder temp. sensor lead wire connector (2).

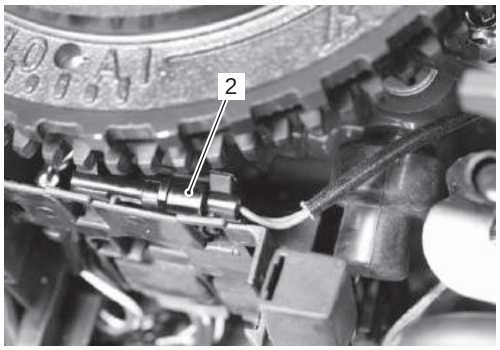

IDK111130029-02

4) Remove the bolt (3) securing lead wire clamp.

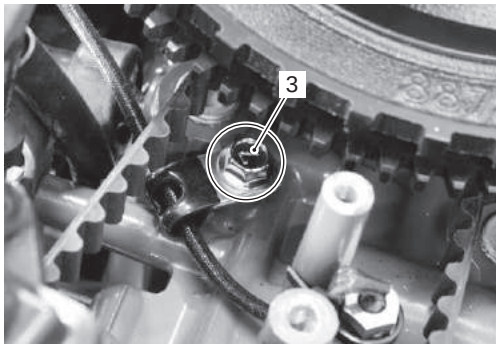

IDK111130030-02

5) Cut the cable tie securing sensor lead wire.
   Loosen and remove the cylinder temp. sensor (4).

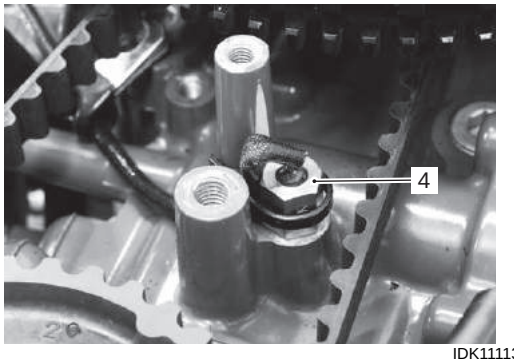

IDK111130031-02

Installation

Installation is reverse order of removal.

- Clean mating surface of sensor and cylinder.
- Tighten sensor to specified torque.

Tightening torque
Cylinder temp. sensor (a): 9 N·m (0.9 kgf-m, 6.5 lbf-ft)

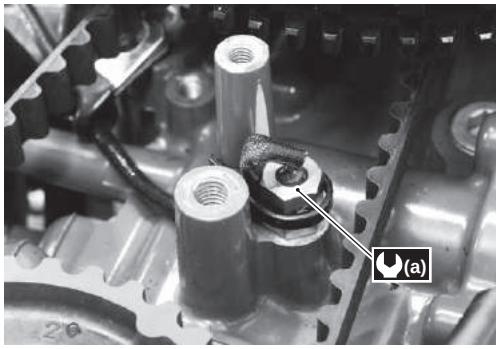

IDK111130032-02

- Connect connector to sensor securely.
- Secure the sensor lead wire with the cable tie.
- Check to ensure that all removed parts are back in original position.
- Check wire routing.
  Refer to “Wiring Harness Routing Diagram” in Section 4A (Page 4A-3).

Cylinder Temp. Sensor Inspection

CENDK1111306007

1) Remove the cylinder temperature sensor.
   Refer to “Cylinder Temp. Sensor Removal and Installation” (Page 1C-7).
2) Immerse temperature sensing part of cylinder temp. sensor in water.
3) Measure resistance between sensor terminals while heating water gradually.
4) If measured resistance does not change in the proportion indicated, replace sensor.

Cylinder temp. sensor specification

Water temperature: °C (°F)	0 (32)	25 (77)	50 (122)	75 (135)
Resistance (kΩ)	5.3 – 6.6	1.8 – 2.3	0.73 – 0.96	0.33 – 0.45

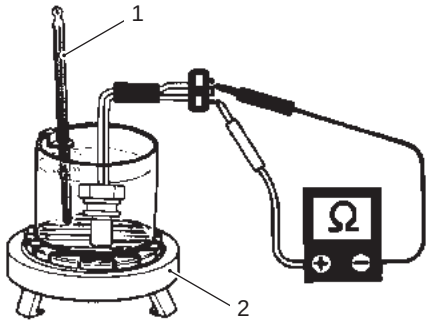

I9J011130051-01

1. Thermometer	2. Heater

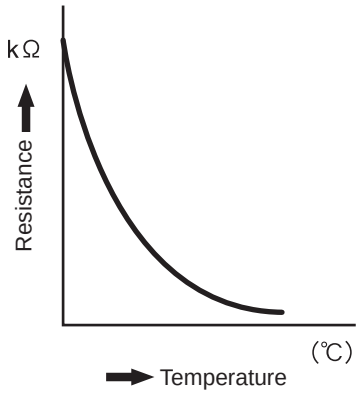

I9J011130008-02

5) Reinstall the cylinder temp. sensor.
   Refer to “Cylinder Temp. Sensor Removal and Installation” (Page 1C-7).

IAT Sensor Removal and Installation

CENDK1111306009

Removal

1) Disconnect the IAT sensor lead wire connector.
2) Remove IAT sensor (1).

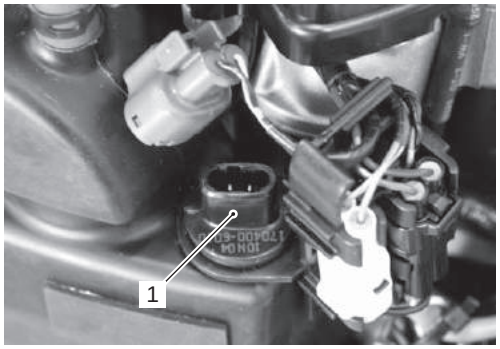

IDK111130033-02

Installation

Installation is reverse order of removal with special attention to the following steps.

- Check to ensure that all removed parts are back in original position.
- Check wire routing.
  Refer to “Wiring Harness Routing Diagram” in Section 4A (Page 4A-3).

IAT Sensor Inspection

CENDK1111306010

1) Remove the IAT sensor.
   Refer to “IAT Sensor Removal and Installation” (Page 1C-8).
2) Immerse temperature sensing part of IAT sensor in water.
3) Measure resistance between sensor terminals while heating water gradually.
4) If measured resistance does not change in the proportion indicated, replace sensor.

IAT sensor specification

Water temperature: °C (°F)	0 (32)	25 (77)	50 (122)	75 (135)
Resistance (kΩ)	5.3 – 6.6	1.8 – 2.3	0.73 – 0.96	0.33 – 0.45

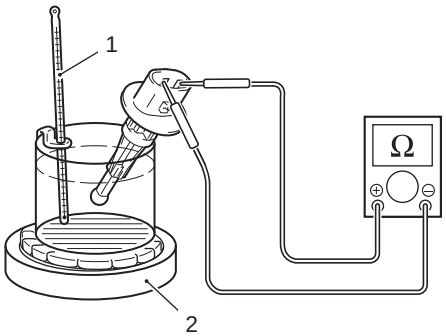

I9J011130007-03

1. Thermometer	2. Heater

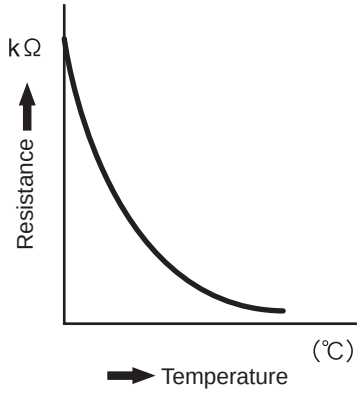

I9J011130008-02

5) Reinstall the IAT sensor.
   Refer to “IAT Sensor Removal and Installation” (Page 1C-8).

CMP Sensor Removal and Installation

CENDK1111306012

Removal

1) Disconnect the CMP sensor lead wire connector at sensor.
2) Remove the bolt and CMP sensor (1).

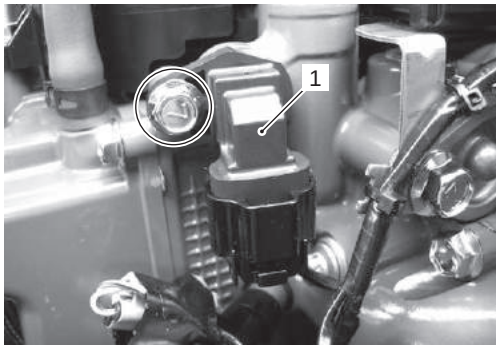

IDK111130034-01

Installation

Installation is reverse order of removal.

- Install CMP sensor, then tighten mounting bolt securely.
- Connect sensor lead wire connector to CMP sensor.

CMP Sensor Inspection

CENDK1111306011

1) Stop the engine.
2) Remove the bolt and CMP sensor (1).

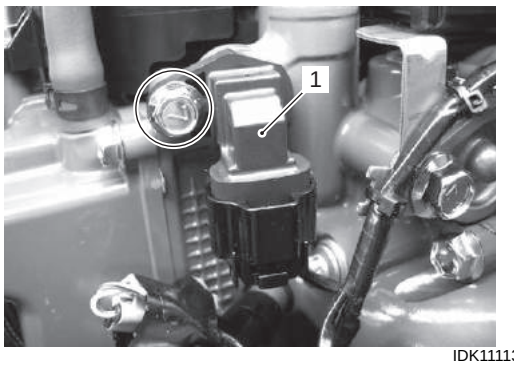

IDK111130034-01

3) Connect the ECM power source cable to SDS communication connector.

   Special tool
   TOOL (A): 09933–08910 (ECM power source cable)

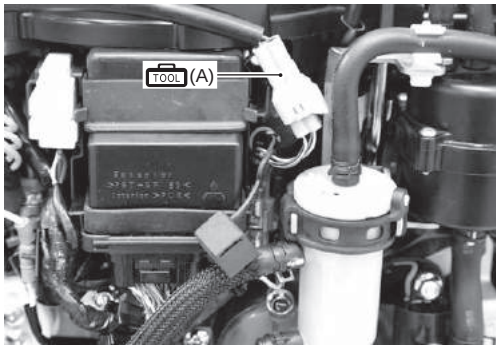

IDK111130035-02

4) Connect the 26-pin test cord between ECM and wire harness as shown in figure.

Special tool
(B): 09930–88940 (26-pin test cord)

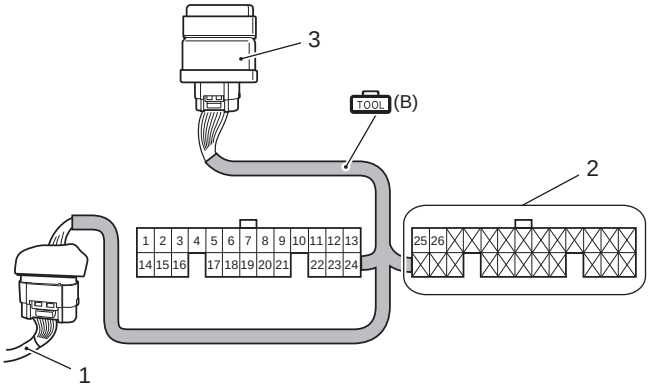

IDK111130010-01

1. Wire harness	2. Black connector	3. ECM

5) Connect the ECM power source cable to battery.
6) Connect the tester probe (“+”, Red) to No.25 terminal.
7) Connect the tester probe (“–”, Black) to No.7 terminal (or to body ground).

Special tool
: 09930–99320 (Digital tester)

Tester knob indication
DC Voltage

26-pin test cord (Black connector)

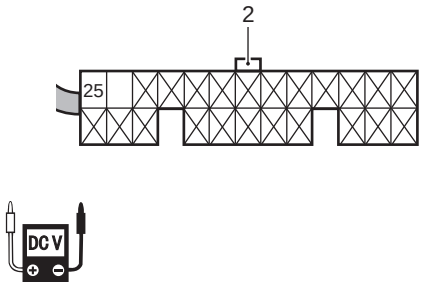

IDK111130011-02

8) Measure the voltage when the tip of a steel screwdriver is brought near and then pulled away from the sensor tip.

When screwdriver is brought near
Approx. 5 V

When screwdriver is pulled away
Approx. 0.3 V

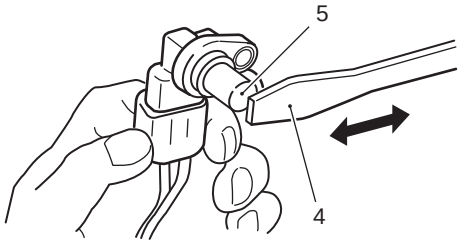

IDK111130018-02

4. Screw driver	5. CMP sensor

9) If the voltage does not change in the above test, check wire harnesses for open and short.
If wire harnesses are in good condition, replace CMP sensor and recheck.
10) Reinstall CMP sensor.

MAP Sensor Removal and Installation

CENDK1111306013

Removal

1) Disconnect lead wire connector (1) at MAP sensor.
2) Remove the bolt (2) and MAP sensor (3).

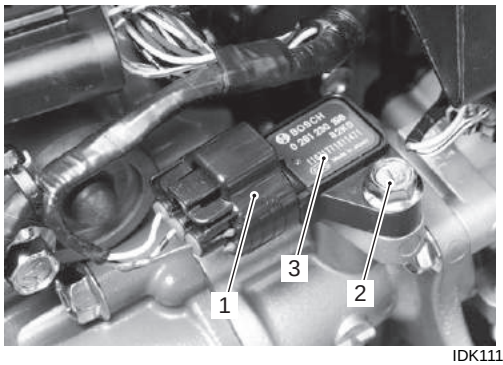

IDK111130036-02

Installation

Installation is reverse order of removal.

- Install MAP sensor, then tighten mounting bolt securely.
- Connect sensor lead wire connector to MAP sensor.

MAP Sensor Output Voltage Inspection

CENDK1111306014

1) Connect the 26-pin test cord between ECM and wire harness as shown in figure.

Special tool
TOOL (A): 09930–88940 (26-pin test cord)

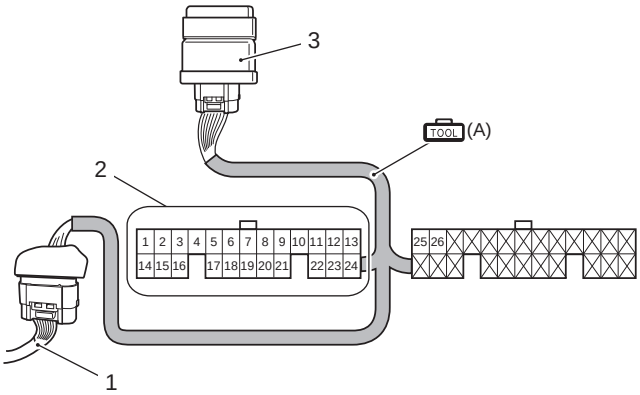

IDK111130012-01

1. Wire harness	2. White connector	3. ECM

2) Connect the ECM power source cable to SDS communication connector and battery.

Special tool
TOOL (B): 09933–08910 (ECM power source cable)

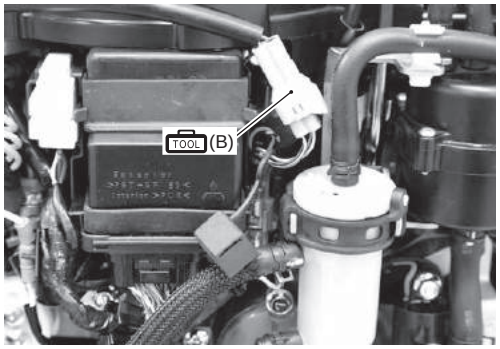

IDK111130037-02

3) Remove the bolt and MAP sensor (1) from intake manifold.

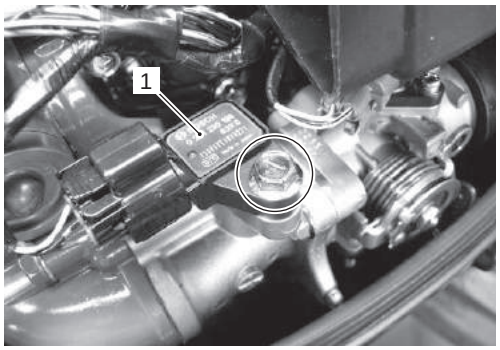

IDK111130038-01

4) Connect vacuum pump gauge (with hose) to MAP sensor as shown in figure.

Special tool
TOOL (C): 09917–47011 (Vacuum pump gauge)

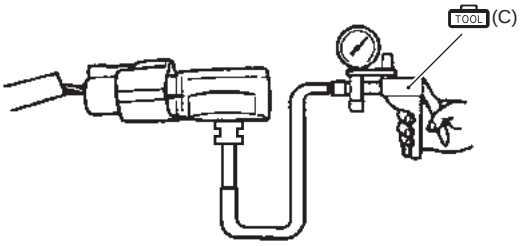

IDK111130002-03

5) While applying negative pressure (vacuum) to MAP sensor, measure “23” terminal voltage.

MAP sensor output voltage change

Negative pressure: kPa (kg/cm², mmHg)	0 (0, 0)	40 (0.4, 300)	80 (0.8, 600)
“23” terminal voltage (V)	4.00	2.42	0.84

(at 759.8 mmHg, 101.3 kPa, 29.91 inHg barometric pressure.)

26-pin test cord (White connector)

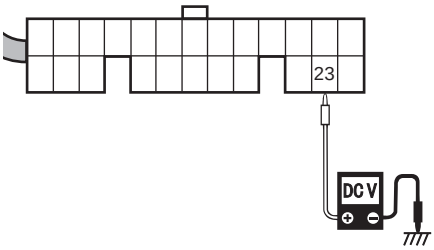

IDK111130013-01

Special tool
TOOL : 09930–99320 (Digital tester)

Tester knob indication
DC Voltage (⎓)

6) If out of specification, Check wire harnesses for open and short. If wire harnesses are in good condition, replace MAP sensor and recheck.

7) Reinstall MAP sensor.
Refer to “MAP Sensor Removal and Installation” (Page 1C-10).

IAC Valve Removal and Installation

CENDK1111306015

Refer to “Throttle Body Removal and Installation” in Section 1D (Page 1D-7).

NOTICE

The throttle body will lose its original performance if it has been disassembled and reassembled.

Do not try to adjust or remove any of the throttle body component parts (Throttle position sensor, throttle valve, throttle stop screw, etc.).
These components have been factory adjusted to precise specifications.

IAC Valve Inspection

CENDK1111306016

1) Disconnect connector from IAC valve (1).
2) Check the coil of IAC valve for resistance.
   If out of specification, replace IAC valve.

IAC valve resistance
Standard: 31 – 42 Ω

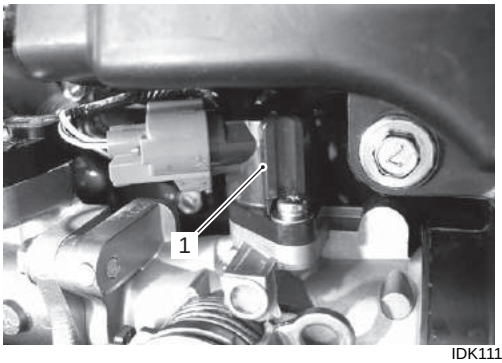

IDK111130039-01

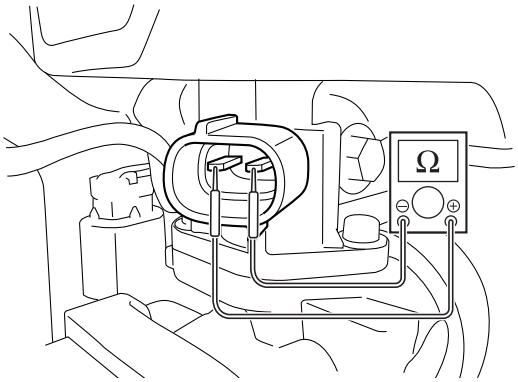

IDK111130019-01

TPS Inspection

CENDK1111306017

1) Stop the engine.
2) Connect the ECM power source cable to SDS communication connector.

Special tool
TOOL (A): 09933–08910 (ECM power source cable)

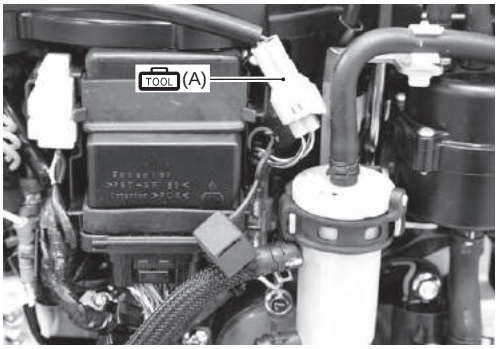

IDK111130040-02

3) Connect the 26-pin test cord between ECM and wire harness as shown in figure.

Special tool
TOOL (B): 09930–88940 (26-pin test cord)

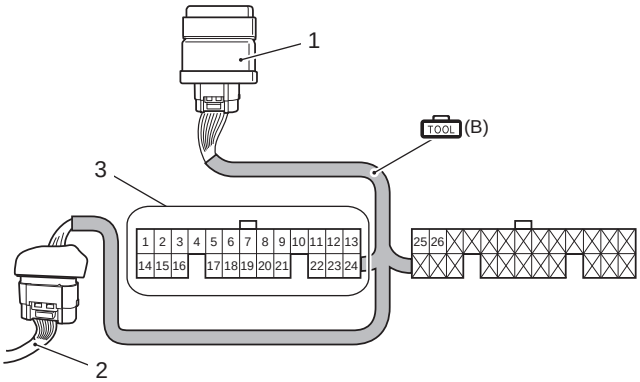

IDK111130014-01

1. ECM	2. Wire harness	3. White connector

4) Connect the ECM power source cable to battery.
5) Connect tester probe (“+”, Red) to No.10 terminal.

6) Connect tester probe ("–", Black) to No.7 terminal (or to body ground)

26-pin test cord (White connector)

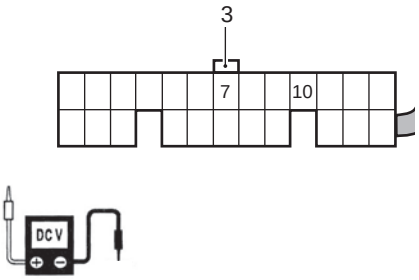

IDK111130015-01

7) Check for sensor output voltage.
Slowly move the throttle control grip to open, and check if voltage changes linearly within specification, according to throttle valve opening angle.

Sensor output voltage
FCT position: Approx. 0.7 V
WOT position: Approx. 3.8 V

Special tool
TOOL : 09930–99320 (Digital tester)

Tester knob indication
DC Voltage (⎓)

NOTICE

The throttle body will lose its original performance if it has been disassembled and reassembled.

Do not try to adjust or remove any of the throttle body component parts (Throttle position sensor, throttle valve, throttle stop screw, etc.).
These components have been factory adjusted to precise specifications.

8) If out of specification, check wire harness for open and short. If wire harnesses are in good condition, replace the throttle body and recheck.

Emergency and Engine Stop Switch Inspection

CENDK1111306008

1) Disconnect the emergency stop switch lead wire.
2) Check the continuity / infinity between the wiring leads under the condition shown below.

Special tool
TOOL (A): 09930–99320 (Digital tester)

Tester knob indication
Continuity (•))))

	Tester probe connection		Tester indicates
	Red (+)	Black (–)	
Lock plate installed	Blue / Red	Black	Infinity
Lock plate removed			Continuity
Lock plate installed and stop button depressed			Continuity

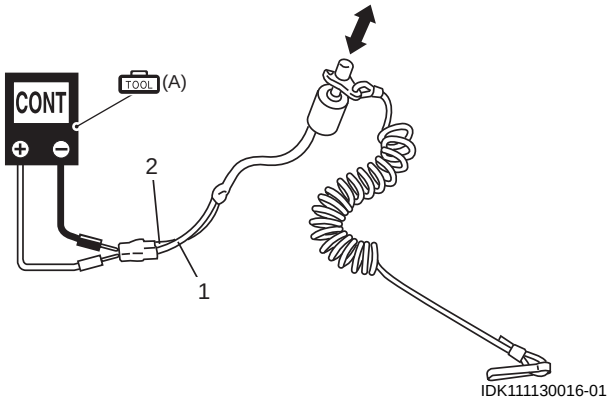

IDK111130016-01

1. Bl/R	2. B

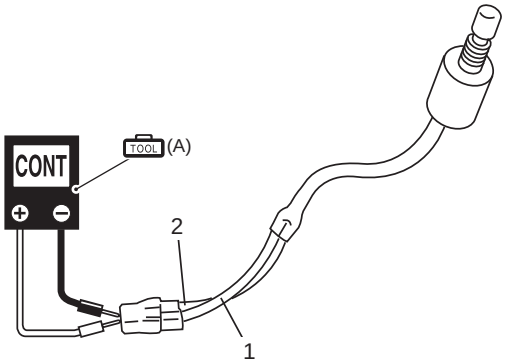

IDK111130017-02

1. Bl/R	2. B

3) If out of specification, replace the switch.

Power Unit Mechanical

General Description

Power Unit Construction Description

CENDK1111401001

The engine is direct water-cooled, in-line 2 cylinders, 4 stroke cycle gasoline unit with SOHC (single overhead camshaft) valve mechanism.
The SOHC is mounted over the cylinder head; it is driven by crankshaft through timing belt (cogged belt).
Unlike conventional overhead valve (OHV) engines, this engine has no push rods. Thus, valve movement is more direct and enables them to follow crankshaft rotation without any delay.

Cylinder Number
Cylinder number is as mentioned in figure.

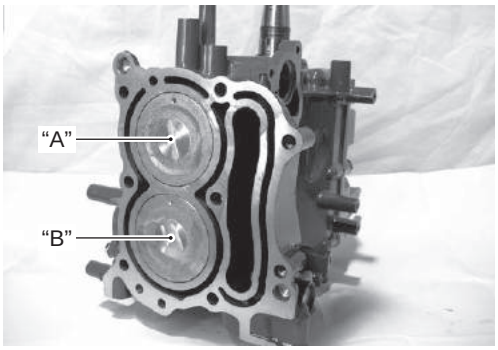

IDK111140023-01

"A": No.1 Cylinder	"B": No.2 Cylinder

Diagnostic Information and Procedures

Cylinder Compression Check

CENDK1111404001

Refer to "Cylinder Compression Pressure Check" in Section 0B (Page 0B-22).

Oil Pressure Check

CENDK1111404002

Refer to "Oil Pressure Check" in Section 0B (Page 0B-21).

Service Instructions

Valve Clearance Inspection

CENDK1111406001

Refer to "Valve Clearance Inspection and Adjustment" in Section 0B (Page 0B-8).

Recoil Starter Removal and Installation

CENDK1111406002

Refer to "Recoil Starter Removal and Installation" in Section 1J (Page 1J-3).

Cylinder Head Cover Removal and Installation

CENDK1111406003

Removal
Before removing cylinder head cover, disconnect battery cables from battery.

1) Remove both lower side covers.
   Refer to "Lower Side Cover Removal and Installation" in Section 2A (Page 2A-2).
2) Remove the recoil starter (1).
   Refer to "Recoil Starter Removal and Installation" in Section 1J (Page 1J-3).

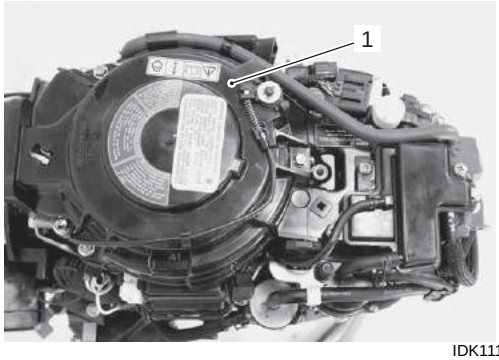

IDK111140033-02

3) Remove the breather hose (2) from cylinder head cover.

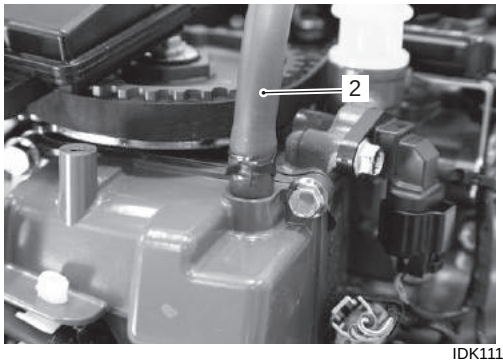

IDK111140034-01

4) Remove the bolts (3) and fuel pump guard (4).

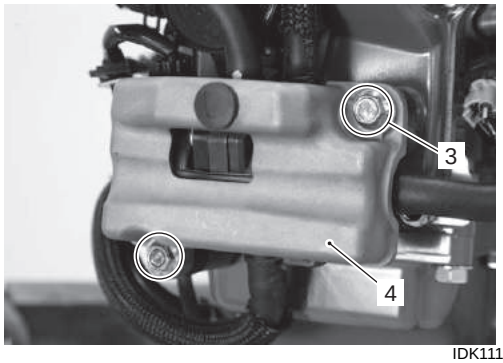

IDK111140035-01

5) Disconnect the pump lead wire connector (5) at high pressure fuel pump.
Remove the bolt securing harness holder (6).
Remove the high pressure fuel pump (7) from cylinder head cover.

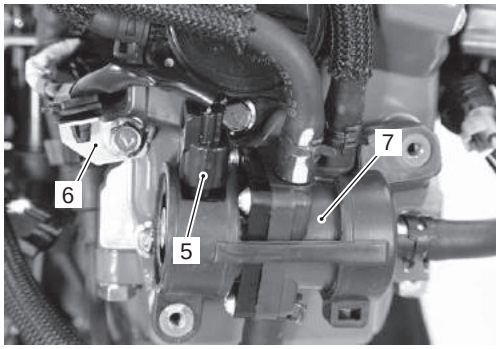

IDK111140036-02

6) Pull off the fuel return hose (8) from hose clamp.
7) Remove the harness clamp (9) from cylinder head cover by releasing clamps' lock.

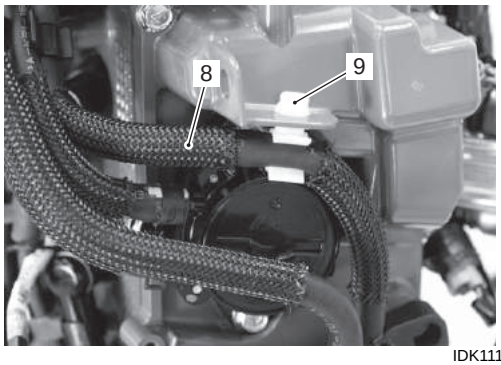

IDK111140037-01

8) Remove the bolts securing low pressure fuel pump (10), then remove the fuel pump from cylinder head cover.

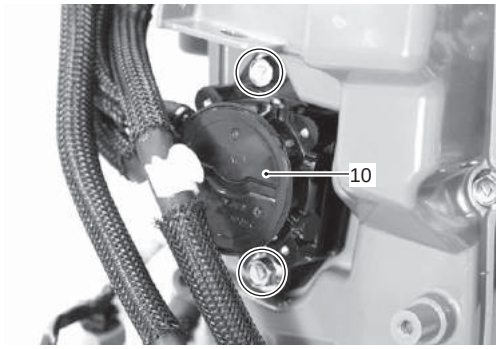

IDK111140038-01

9) Remove the six bolts securing cylinder head cover (11) to the cylinder head, then remove the cylinder head cover.

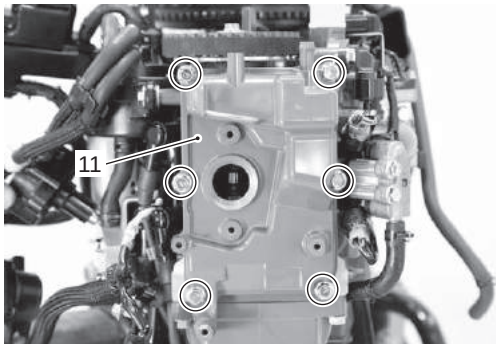

IDK111140039-01

Installation

Installation is reverse order of removal with special attention to the following steps.

- Clean sealing surface on cylinder head and cover.
- Remove oil and dust from sealing surfaces.
- Install new cylinder head cover gasket (1) to head cover (2).

NOTE

Examine cylinder head cover gasket for damage.
Always replace gasket with new one.

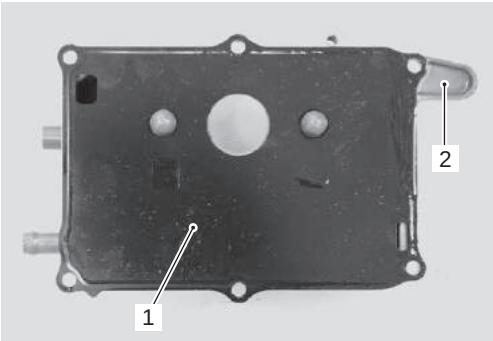

IDK111140040-01

- Install cylinder head cover (2) to cylinder head, then tighten cylinder head cover bolts to specified torque.

Tightening torque
Cylinder head cover bolt (a): 10 N·m (1.0 kgf-m, 7.2 lbf-ft)

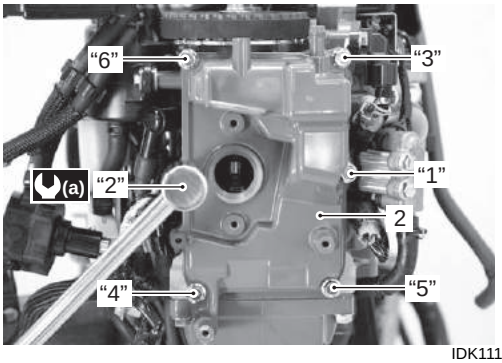

IDK111140041-01

- Install the recoil starter.
  Refer to "Recoil Starter Removal and Installation" in Section 1J (Page 1J-3).
- Perform the following final assembly checks to ensure proper and safe operation.
  - All parts removed have been returned to their original positions.
  - Wire and hose routing matches service manual illustration. Refer to "Fuel Hose Routing" in Section 4B (Page 4B-2) and "Wiring Harness Routing Diagram" in Section 4A (Page 4A-3).
  - No oil leakage is evident during final test running.

Air Intake Silencer Case Removal and Installation

CENDK1111406004

Removal

1) Remove the recoil starter.
   Refer to "Recoil Starter Removal and Installation" in Section 1J (Page 1J-3).
2) Remove the breather hose (1) from the air intake silencer case.
3) Disconnect the intake air temp. sensor lead wire connector (2) at sensor.

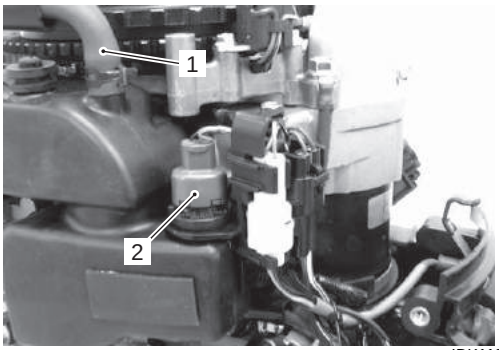

IDK111140042-01

4) Remove the intake air temp. sensor (3).
5) Remove the connector holder (4) with grommet (5).

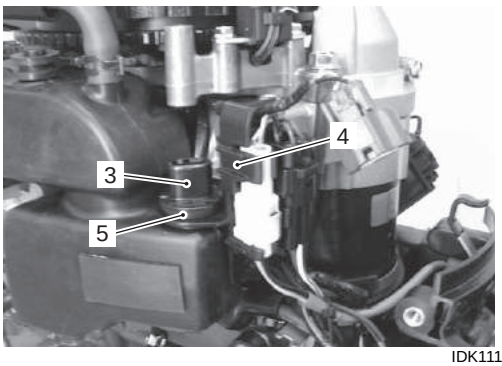

IDK111140043-01

6) Remove the bolt and air intake silencer case (6).

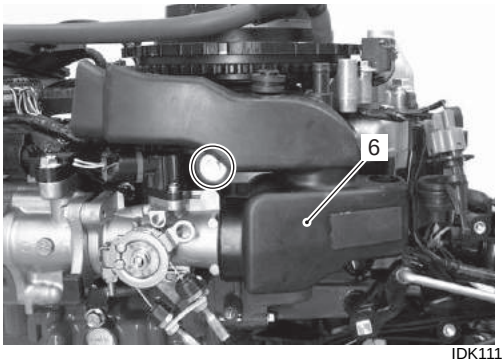

IDK111140044-01

Installation

Installation is reverse order of removal.

- Install air intake silencer case (1), then tighten bolt securely.

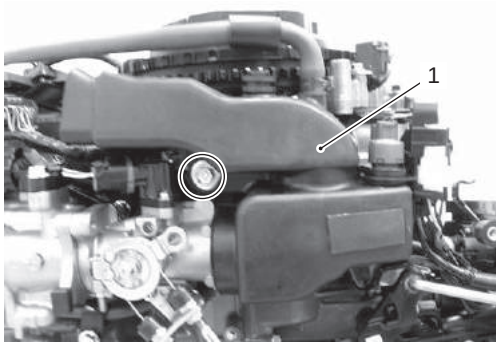

IDK111140045-03

- Install the recoil starter.
  Refer to “Recoil Starter Removal and Installation” in Section 1J (Page 1J-3).

Intake Manifold and Throttle Body Components

CENDK1111406022

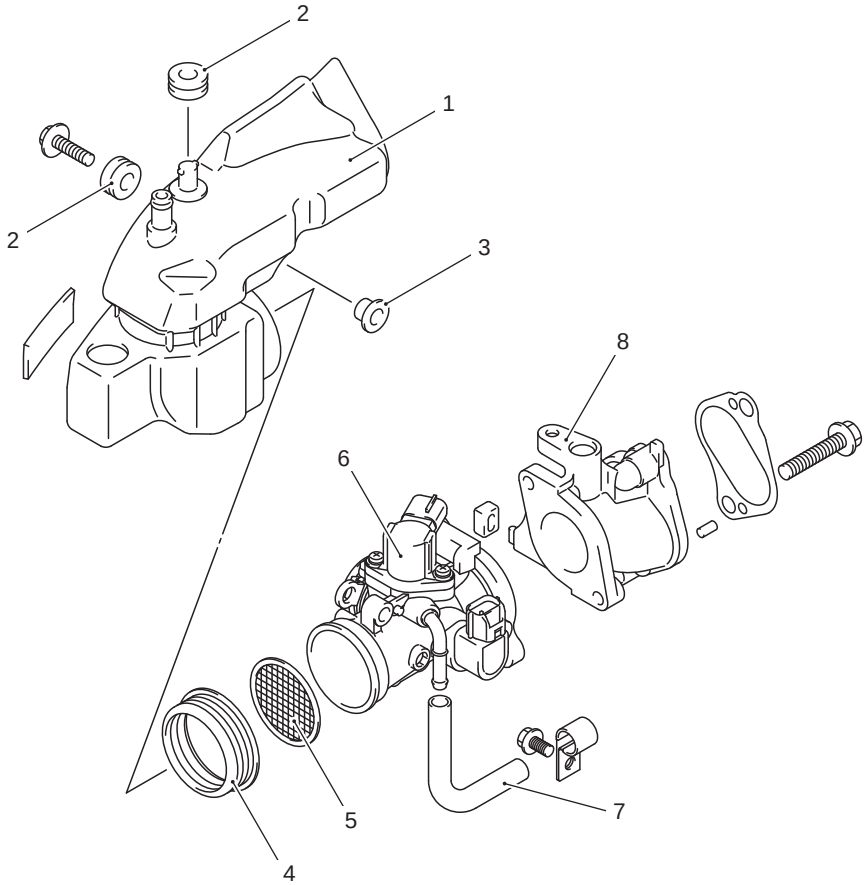

IDK111140046-02

1. Air intake silencer case	4. Seal	7. IAC hose
2. Cushion	5. Flame arrester	8. Intake manifold
3. Washer	6. Throttle body	

Intake Manifold Removal and Installation

CENDK1111406005

Removal

1) Remove the recoil starter.
   Refer to “Recoil Starter Removal and Installation” in Section 1J (Page 1J-3).
2) Remove the air intake silencer case (1).
   Refer to “Air Intake Silencer Case Removal and Installation” (Page 1D-3).

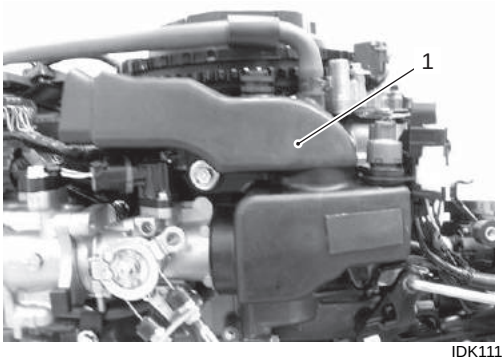

IDK111140047-02

3) Loosen the throttle cable lock nuts (2). Remove the throttle control cables (3) from throttle drum and cable bracket.

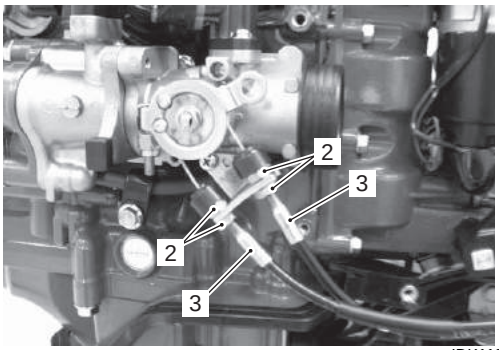

IDK111140049-01

4) Disconnect the MAP sensor lead wire connector (4) at sensor.
   Disconnect the IAC valve lead wire connector (5) at IAC valve.
   Disconnect the TPS lead wire connector (6) at sensor.

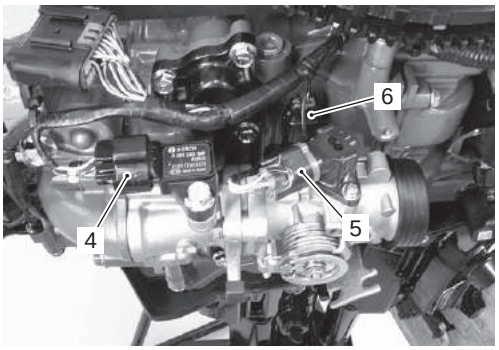

IDK111140048-01

5) Remove the two bolts (7) and then remove the intake manifold and throttle body assembly (8).

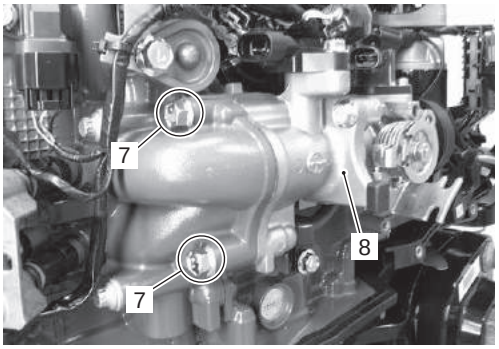

IDK111140050-01

6) Remove the bolt securing the IAC hose clamp (9).

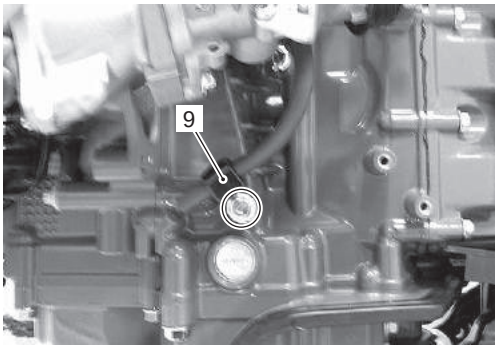

IDK111140051-01

7) Remove the bolts (10).
   Remove the throttle body from intake manifold.

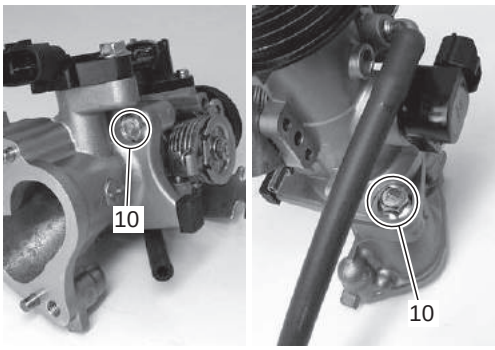

IDK111140052-01

Installation

Installation is reverse order of removal with special attention to the following steps.

NOTICE

Air leakage will induce a lean air / fuel mix which will result in severe engine damage.

Do not reuse gasket once removed.
Always use a new gasket.

- Install the O-ring (1) to throttle body.

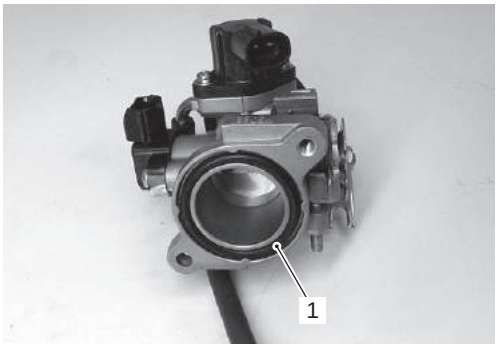

IDK111140053-01

- Assemble the throttle body (2) and intake manifold (3), then secure with bolts.

  Tightening torque
  Throttle body (a): 11 N·m (1.1 kgf-m, 8.0 lbf-ft)

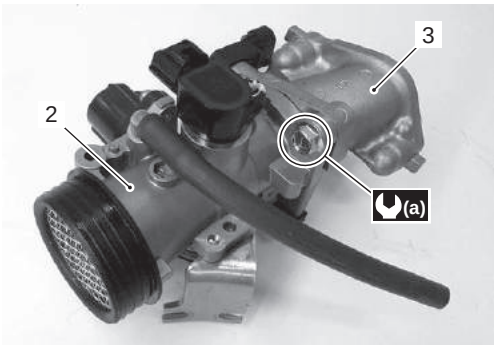

IDK111140054-01

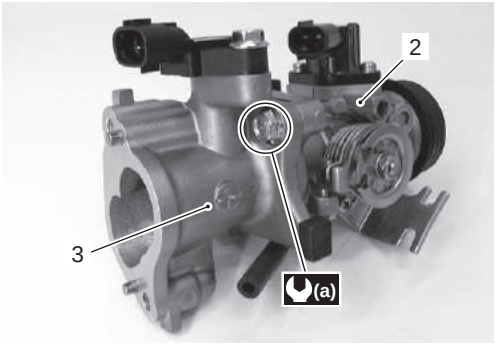

IDK111140055-01

- Install the dowel pins (4) and gasket (5).

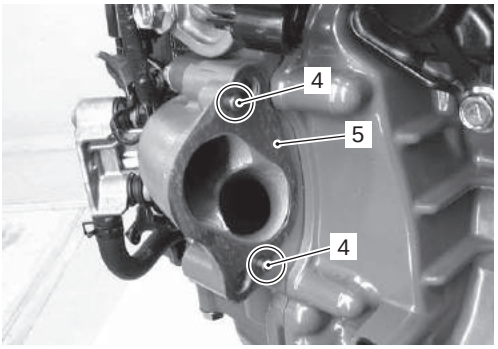

IDK111140056-01

- Install the intake manifold and throttle body assembly (6), then tighten bolts securely.

  Tightening torque
  Intake manifold (b): 23 N·m (2.3 kgf-m, 16.5 lbf-ft)

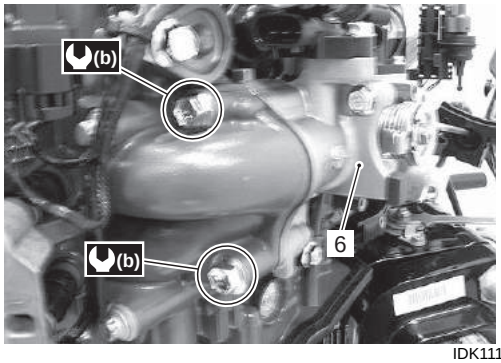

IDK111140057-01

- Connect the lead wire connectors to each sensor and actuator.
- Install the frame arrester (7).

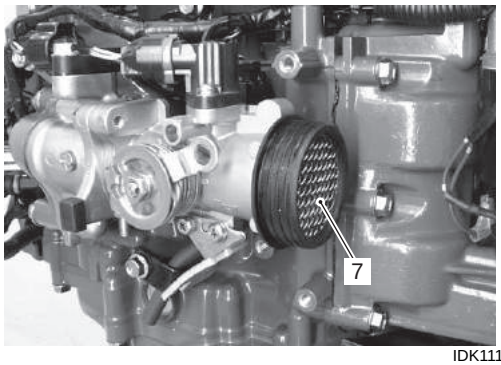

IDK111140058-01

- Install the throttle cable (8).
  Refer to “Throttle Control Cable Installation and Adjustment” in Section 2A (Page 2A-5).

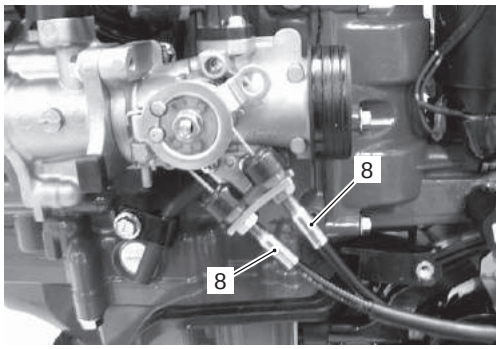

IDK111140059-01

- Install the air intake silencer case.
  Refer to “Air Intake Silencer Case Removal and Installation” (Page 1D-3).
- Install the recoil starter.
  Refer to “Recoil Starter Removal and Installation” in Section 1J (Page 1J-3).
- Perform the following final assembly checks to ensure proper and safe operation.
  – All parts removed have been returned to their original positions.
  – Wire and hose routing matches service manual illustration.
  Refer to “Wiring Harness Routing Diagram” in Section 4A (Page 4A-3) and “Fuel Hose Routing” in Section 4B (Page 4B-2).

Throttle Body Removal and Installation

CENDK1111406023

Refer to “Intake Manifold Removal and Installation” (Page 1D-5).

Throttle Body Inspection

CENDK1111406024

NOTICE

The throttle body will lose its original performance if it has been disassembled and reassembled.

- **Do not try to disassemble the throttle body.**
- **Do not try to adjust or remove any of the throttle body component parts (Throttle position sensor, throttle valve, throttle stop screw, etc.).**
  These components have been factory adjusted to precise specifications.

- Clean throttle body bore by compressed air.
- Remove all carbon from the throttle valve and its circumference.

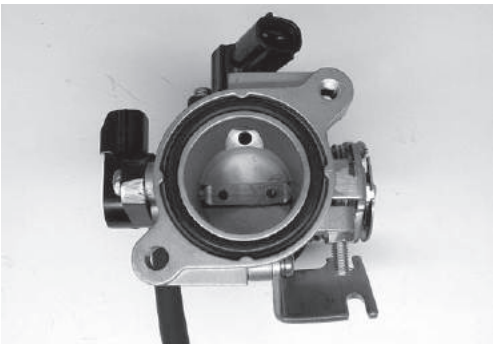

IDK111140060-01

- Check that throttle drum and throttle valve moves smoothly.
- Replace throttle body if necessary.

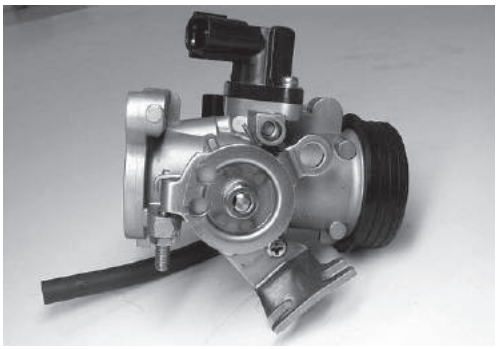

IDK111140061-01

Camshaft Pulley Removal and Installation

CENDK1111406006

Removal

1) Remove the cylinder head cover.
   Refer to “Cylinder Head Cover Removal and Installation” (Page 1D-1).

NOTICE

After the timing belt has been removed, independently turning cam pulley or crankshaft will cause interference between piston and valve, which cause damage to these related parts.

Do not rotate the cam pulley and/or crankshaft with timing belt removed.

NOTE

To prevent valve damage, loosen valve adjusting screws fully before removing timing belt.

2) Loosen all valve adjusting lock nut (1).
   Loosen the four valve adjusting screws (2) fully.
   Leave the screws in place.

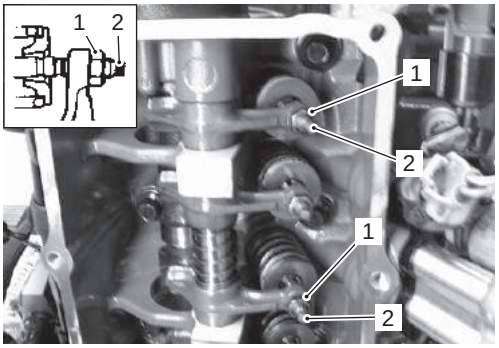

IDK111140001-02

3) Remove the timing belt (3).
   Refer to “Timing Belt Replacement” in Section 0B (Page 0B-10).

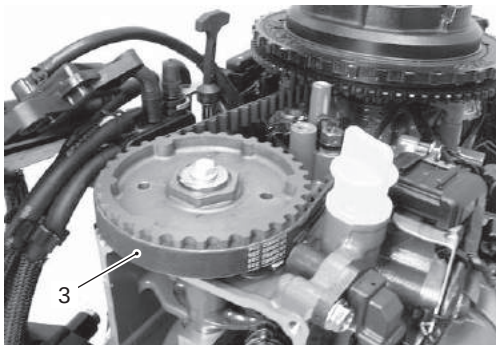

IDK111140062-01

4) Remove the bolt (4), washer (5), camshaft pulley (6) and key (7).

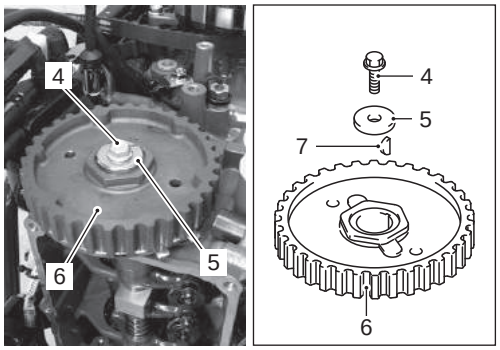

IDK111140002-02

Installation

Installation is reverse order of removal with special attention to the following steps.

- Install the key (1), camshaft pulley (2), washer (3) and bolt (4), then tighten camshaft pulley bolt to specified torque.

  Tightening torque
  Camshaft pulley bolt (a): 10 N·m (1.0 kgf-m, 7.2 lbf-ft)

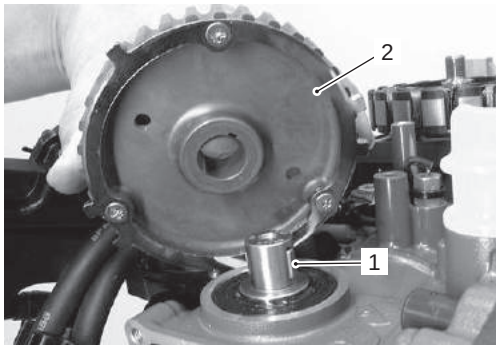

IDK111140063-01

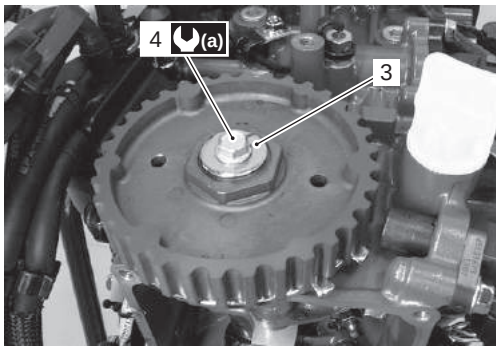

IDK111140064-01

- Install the timing belt.
  Refer to “Timing Belt Replacement” in Section 0B (Page 0B-10).

NOTE

Before installing cylinder head cover, check valve clearance.
Refer to “Valve Clearance Inspection and Adjustment” in Section 0B (Page 0B-8).

- Install cylinder head cover.
  Refer to “Cylinder Head Cover Removal and Installation” (Page 1D-1).

Power Unit Removal and Installation

CENDK1111406007

Removal

Before removing power unit:

- **Disconnect battery cables from battery.**
- **Drain engine oil.**

1) Remove both lower side covers.
   Refer to “Lower Side Cover Removal and Installation” in Section 2A (Page 2A-2).
2) Remove the recoil starter.
   Refer to “Recoil Starter Removal and Installation” in Section 1J (Page 1J-3).
3) Remove the air intake silencer case, throttle body and intake manifold (1).
   Refer to “Intake Manifold Removal and Installation” (Page 1D-5).

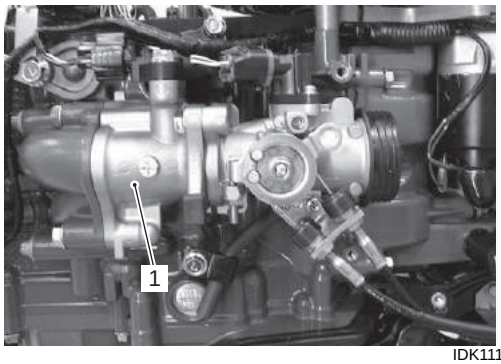

IDK111140065-01

4) Remove the fuel line according to the following procedure.
   a) Remove the fuel inlet hose (2) from fuel filter. Remove the fuel filter (3) from filter bracket.

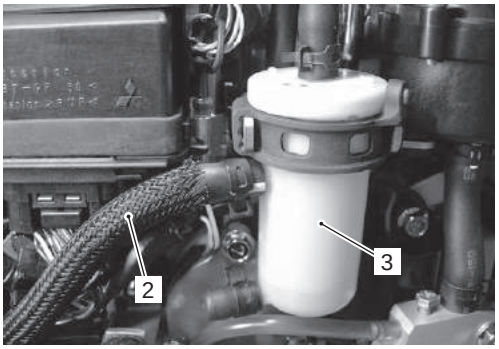

IDK111140024-01

   b) Remove the bolt (4) securing fuel vapor separator (5).
   Remove the fuel vapor separator (5) from separator bracket.

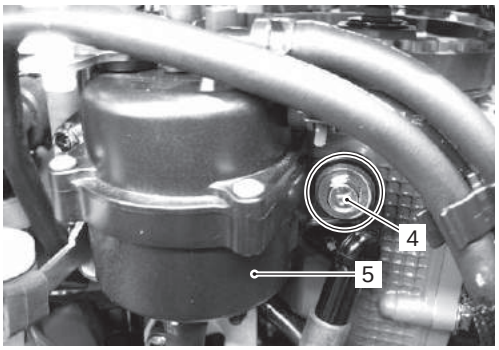

IDK111140025-01

   c) Remove the two bolts (6) securing fuel cooler (7).

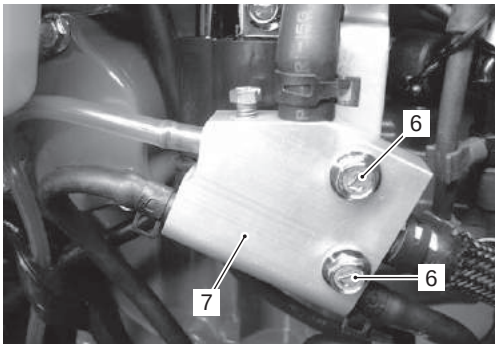

IDK111140026-01

   d) Remove the bolts and high pressure fuel pump guard (8).
   Disconnect the lead wire connector (9) at high pressure fuel pump.

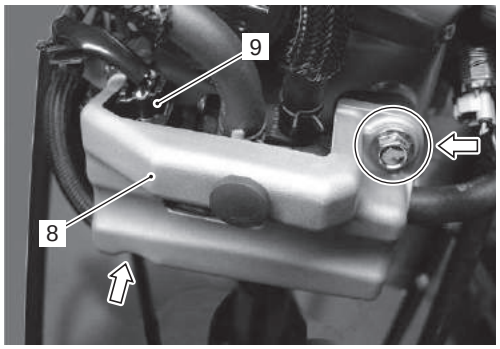

IDK111140027-01

   e) Disconnect the fuel outlet hose (10) from fuel delivery pipe.
   Remove the high pressure fuel pump (11) from cylinder head cover.

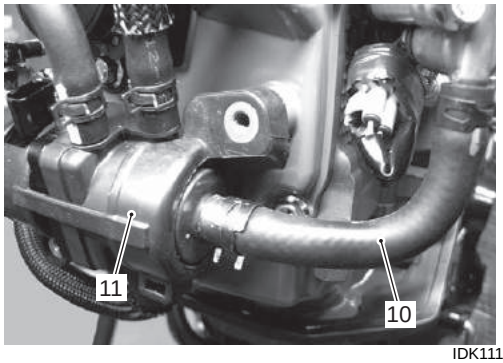

IDK111140028-01

   f) Remove the two bolts securing low pressure fuel pump (12), then detach the low pressure fuel pump from cylinder head cover.

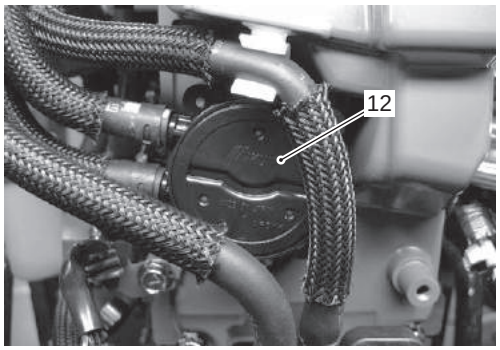

IDK111140029-01

g) Disconnect the water discharge hose (13) from driveshaft housing.

IDK111140030-02

h) Disconnect the fuel cooler water outlet hose (14) from driveshaft housing.

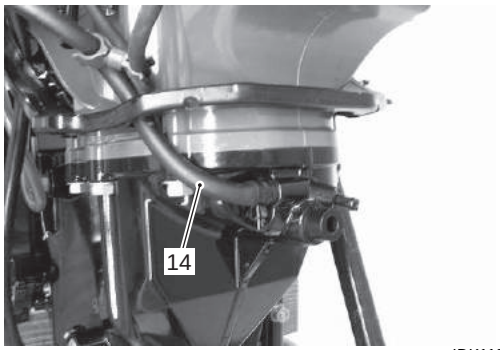

IDK111140031-02

i) Remove the fuel line assembly (with the fuel filter, fuel vapor separator, low pressure fuel pump, high pressure fuel pump, fuel cooler and evaporation chamber).

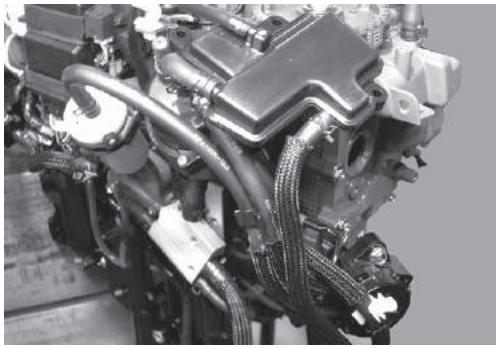

IDK111140032-01

5) Remove the flywheel (15).
Refer to “Flywheel Removal and Installation” in Section 1K (Page 1K-4).

Special tool
(A): 09930–39520 (Flywheel holder)
(B): 09930–39210 (Flywheel remover bolt)
(C): 09930–39411 (Flywheel remover)

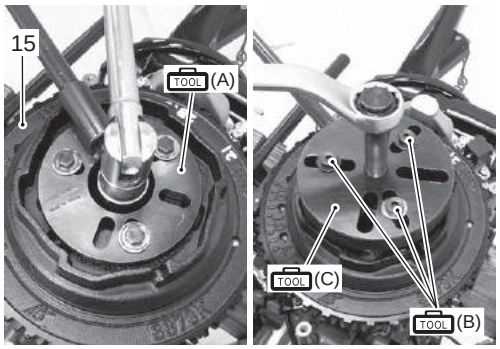

IDK111140066-01

6) Remove the six bolts securing stator base (16), then remove stator base / coil assembly (17).
Refer to “Battery Charge Coil / CKP Sensor / Stator Base Removal and Installation” in Section 1K (Page 1K-5).

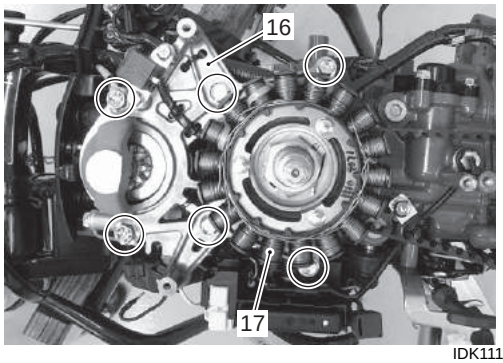

IDK111140067-01

7) Remove the starter motor (18).
Refer to “Starter Motor Removal and Installation” in Section 1I (Page 1I-5).
Remove the bolts and starter motor band (19).

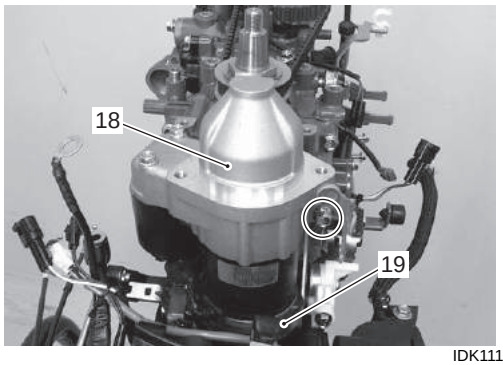

IDK111140068-01

8) Remove the bolt and neutral switch (20).

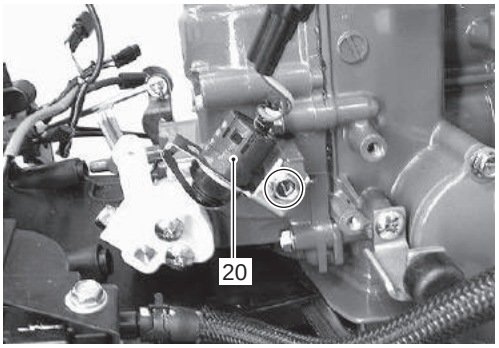

IDK111140069-01

9) Remove the cotter pin (21) and washer (22), then remove the clutch lever link (23).

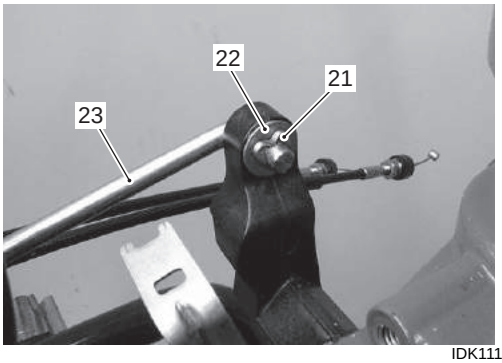

IDK111140070-01

10) Loosen the clutch rod lock nut (24).
To separate the clutch rod from the shift rod, unscrew the connector (25).

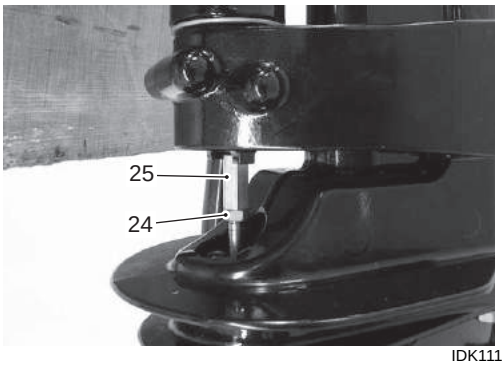

IDK111140071-01

11) Remove the two bolts (26) and clutch control lever / shaft (27).

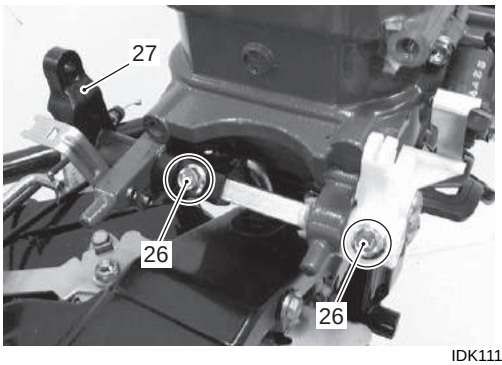

IDK111140072-01

12) Remove the clutch rod arm (28) from clutch rod (29).

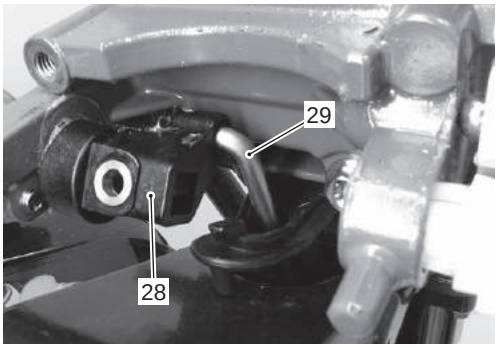

IDK111140073-01

13) Remove the clutch notch lever (30), then account for clutch notch ball (31) and spring (32).

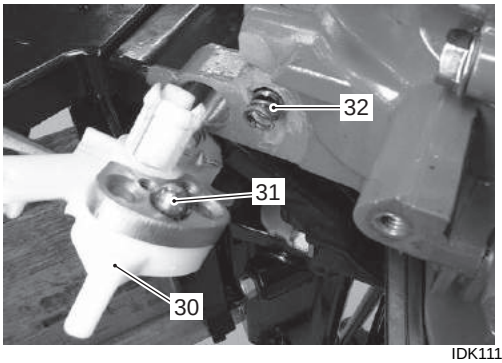

IDK111140074-01

14) Remove the two bolts and ignition coil (33). Remove all spark plugs.

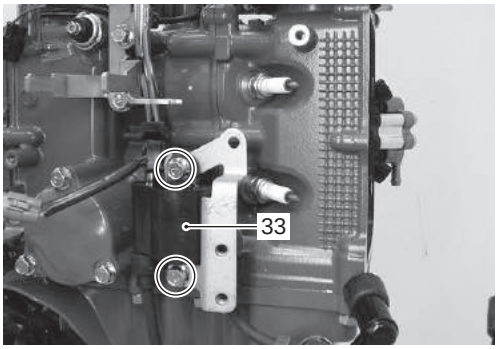

IDK111140075-01

15) Remove the two bolts and fuel filter bracket (34).

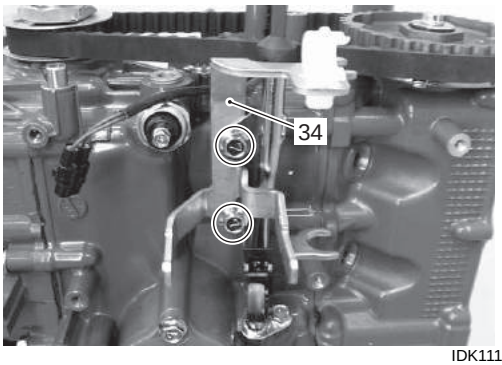

IDK111140076-01

16) Remove the bolt and oil level dipstick tube (35).
Note the position before removing O-ring (36).

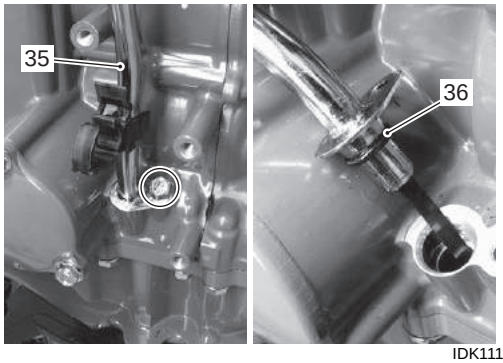

IDK111140077-01

17) Remove the bolt and PORT side cover holder (37).

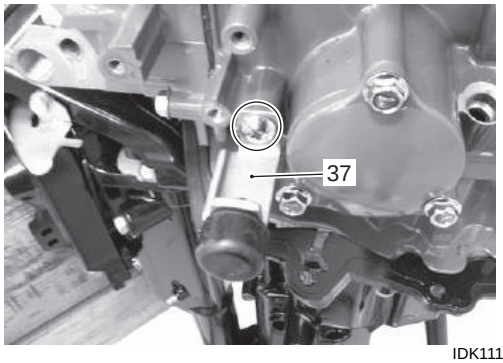

IDK111140078-01

18) Remove the bolts (38), fuel delivery pipe (39) and fuel injectors (40).
Refer to “Fuel Injector Removal and Installation” in Section 1G (Page 1G-20).

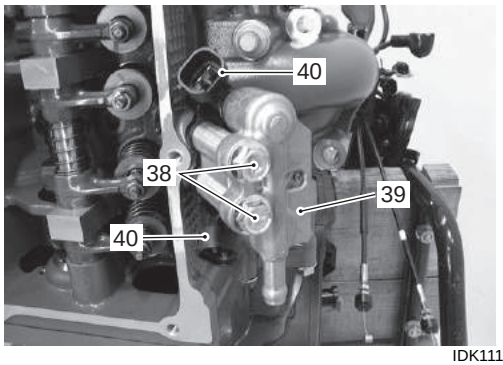

IDK111140079-01

19) Remove the bolt and CMP sensor (41).

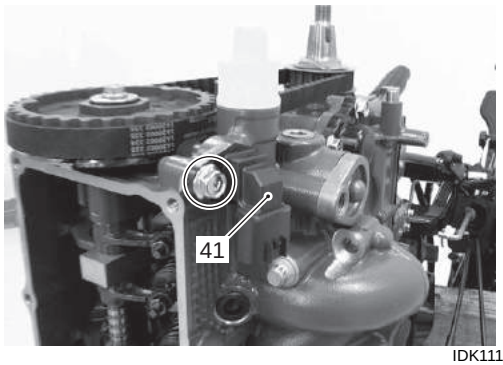

IDK111140080-01

20) Remove the cylinder head cover (42).
Refer to “Cylinder Head Cover Removal and Installation” (Page 1D-1).

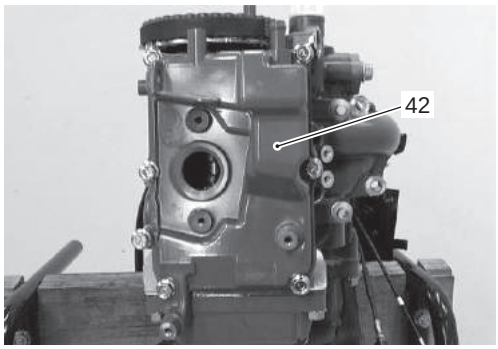

IDK111140081-01

21) Loosen all valve adjusting lock nuts (43).
Loosen the four valve adjusting screws (44) fully.
Leave the screws in place.

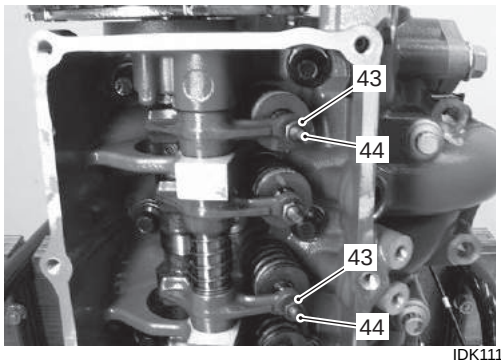

IDK111140082-01

NOTICE

After the timing belt has been removed, independently turning cam pulley or crankshaft will cause interference between piston and valve, which cause damage to these related parts.

To prevent valve damage, loosen valve adjusting screws fully before removing timing belt.

22) Remove the timing belt (45).

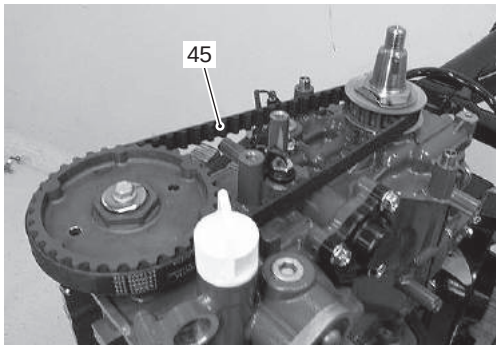

IDK111140083-01

23) Remove the ten bolts.
Lift up and remove power unit from engine holder.

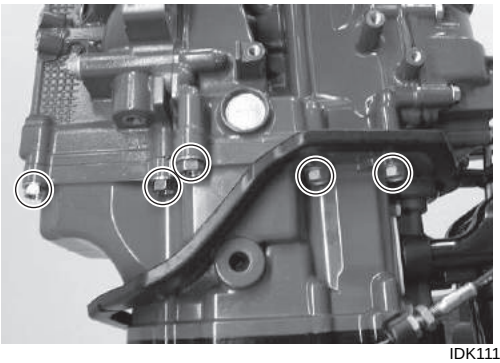

IDK111140084-01

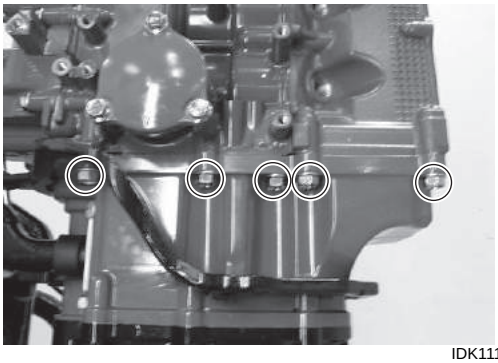

IDK111140085-01

Installation
Installation is reverse order of removal with special attention to the following step.

NOTICE

Previously used gasket may leak oil and/or cooling water, resulting in engine damage.

Do not reuse gasket. Always replace with new part.

Power unit

NOTE

Before installing power unit, apply sealant to the two hatched areas shown in the illustration.

1207B : Sealant 99000–31140 (SUZUKI Bond 1207B (100 g))

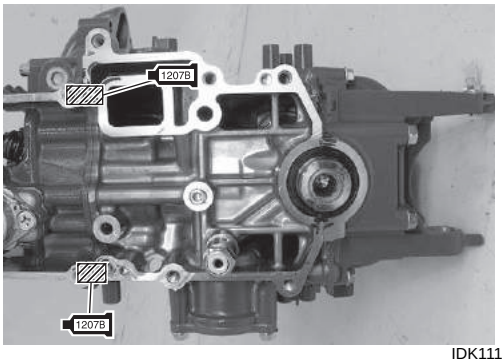

IDK111140086-01

- Install dowel pins (1), gasket (2).
  Apply water resistant grease to driveshaft splines.

W : Grease 99000–25350 (SUZUKI Water Resistant Grease EP2 (250 g))

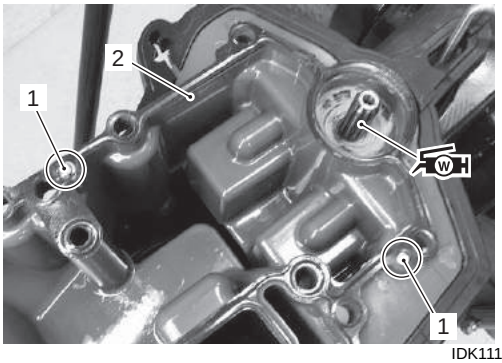

IDK111140087-01

- Lower the power unit onto engine holder.

NOTE

Rotate crankshaft to aid alignment of driveshaft and crankshaft splines.

- Apply Suzuki silicone seal to power unit mounting bolts and tighten bolts to specified torque.

Si : Sealant 93691–80030 (SUZUKI Silicone Seal (100 g))

Tightening torque
Power unit mounting bolt (8 mm) (a): 23 N·m (2.3 kgf-m, 16.5 lbf-ft)

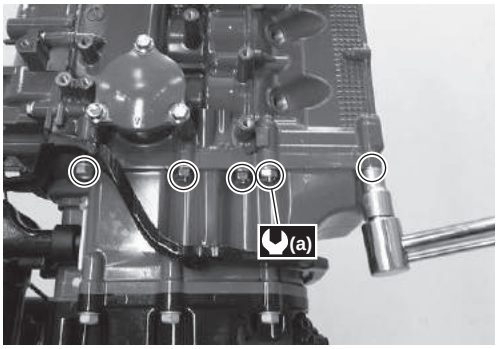

IDK111140088-01

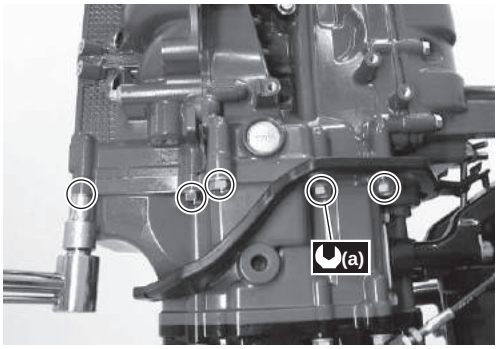

IDK111140089-01

Timing belt

- Install timing belt (1).
  Refer to “Timing Belt Replacement” in Section 0B (Page 0B-10).

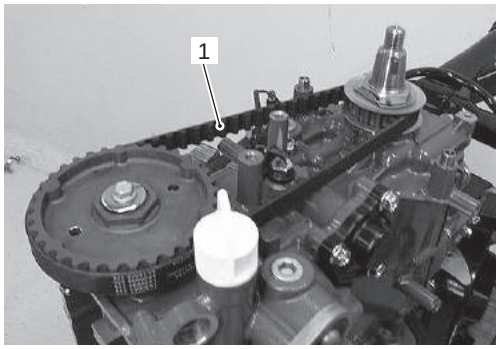

IDK111140090-01

Cylinder head cover

NOTE

Before installing cylinder head cover, check valve clearance.
Refer to “Valve Clearance Inspection and Adjustment” in Section 0B (Page 0B-8).

- Install the cylinder head cover (1).
  Refer to “Cylinder Head Cover Removal and Installation” (Page 1D-1).

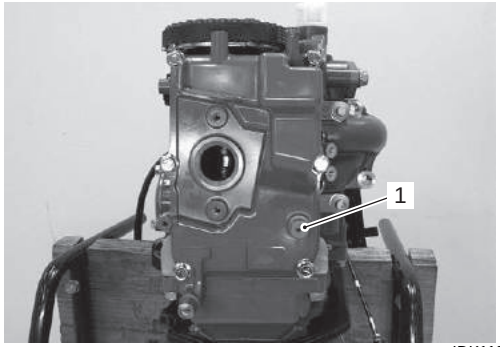

IDK111140091-01

Fuel injector

- Install the fuel delivery pipe and fuel injectors.
  Refer to “Fuel Injector Removal and Installation” in Section 1G (Page 1G-20).

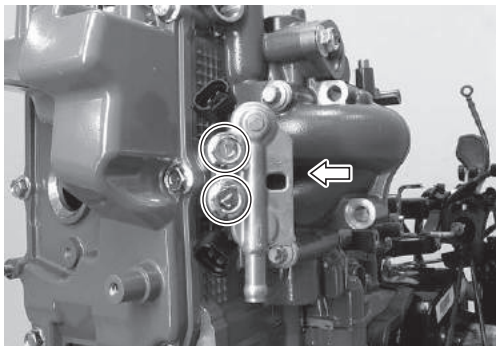

IDK111140092-01

Clutch control lever / shaft

- Install clutch notch spring (1), ball (2) and clutch notch lever (3).

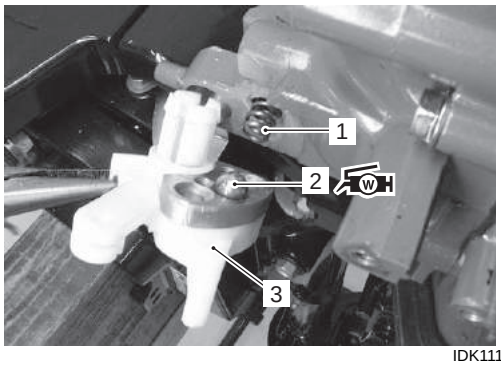

IDK111140093-02

- Install the clutch rod arm (4) to clutch rod (5).

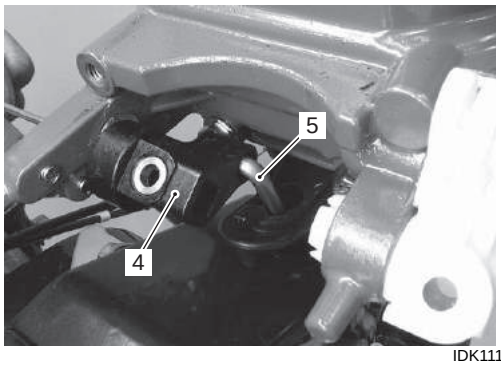

IDK111140094-01

- Install clutch control lever /shaft (6) by passing it from STBD side through the clutch rod arm and then the clutch notch lever.
- Tighten the clutch notch lever and clutch rod arm with screws (7).

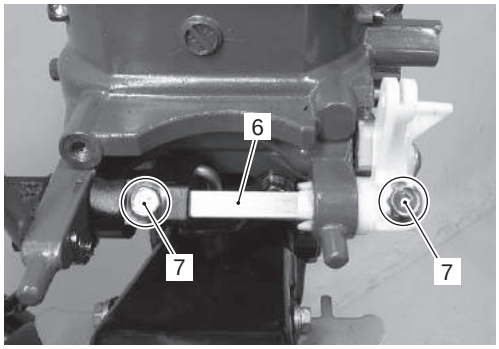

IDK111140095-01

Starter motor

- Install the starter motor (1).
  Refer to “Starter Motor Removal and Installation” in Section 1I (Page 1I-5).

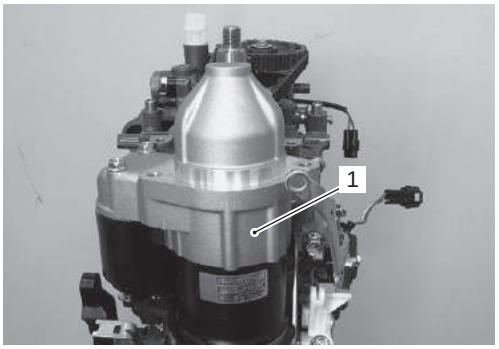

IDK111140096-01

Flywheel

- Install the stator base / coil assembly (1).
  Refer to “Battery Charge Coil / CKP Sensor / Stator Base Removal and Installation” in Section 1K (Page 1K-5).

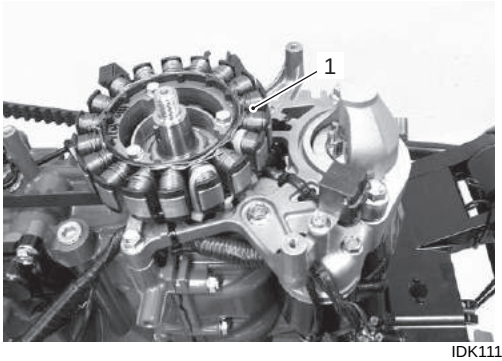

IDK111140097-01

- Install flywheel (2) and tighten flywheel nut to specified torque.
  Refer to “Flywheel Removal and Installation” in Section 1K (Page 1K-4).

  Tightening torque
  Flywheel nut (a): 90 N·m (9.0 kgf-m, 65 lbf-ft)

  Special tool
  TOOL (A): 09930–39520 (Flywheel holder)
  TOOL (B): 09930–39210 (Flywheel remover bolt)

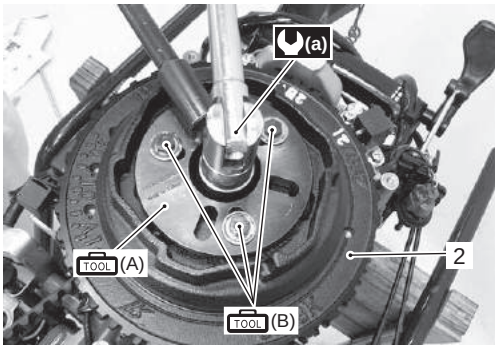

IDK111140098-02

Intake manifold

- Install the air intake silencer case, throttle body and intake manifold (1).
  Refer to “Intake Manifold Removal and Installation” (Page 1D-5).

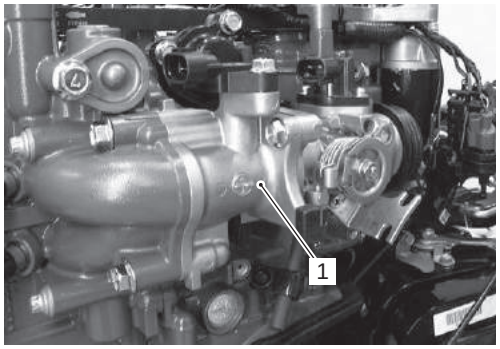

IDK111140099-01

Final assembly check

- Perform the following final assembly checks to ensure proper and safe operation of the repaired unit.
  - All parts removed have been returned to their original positions.
  - Lower unit gear engagement is properly adjusted.
  - Fuel and water hose routing matches service manual illustration.
    Refer to “Fuel Hose Routing” in Section 4B (Page 4B-2) and “Water Hose Routing” in Section 4B (Page 4B-5).
  - Wire routing matches service manual illustration.
    Refer to “Wiring Harness Routing Diagram” in Section 4A (Page 4A-3).
  - No fuel leakage is evident when fuel system is pressurized.
    Refer to “Fuel Leakage Check Procedure” in Section 1G (Page 1G-14).
  - No water leakage is evident during final test running.

Camshaft, Rocker Arm and Rocker Arm Shaft Removal and Installation

CENDK1111406008

Removal

1) Remove the power unit.
   Refer to “Power Unit Removal and Installation” (Page 1D-8).
2) Remove the camshaft pulley (1).
   Refer to “Camshaft Pulley Removal and Installation” (Page 1D-7).

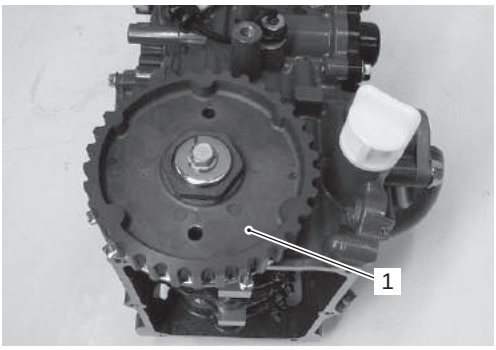

IDK111140100-01

3) Remove the oil pump (2).
   Refer to “Oil Pump Removal and Installation” in Section 1E (Page 1E-2).

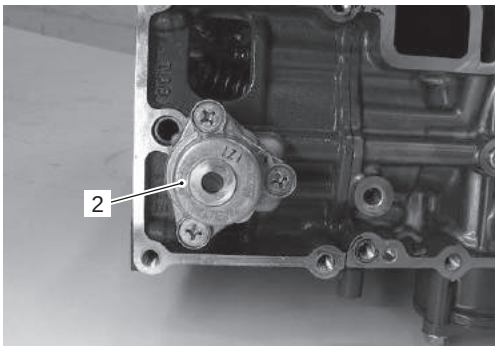

IDK111140101-01

4) Remove the rocker arm shaft (3).

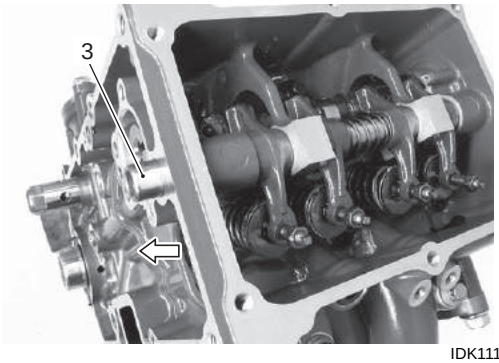

IDK111140102-01

NOTE

Reassemble each rocker arm to original position.

5) Remove the spring (4), rocker arms (5).

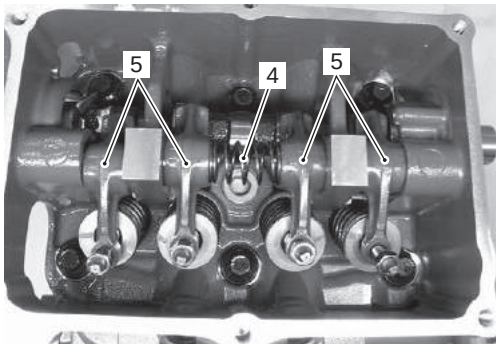

IDK111140103-01

6) Remove the camshaft (6) pulling toward oil pan side.

NOTE

Pull out camshaft toward oil pan side.

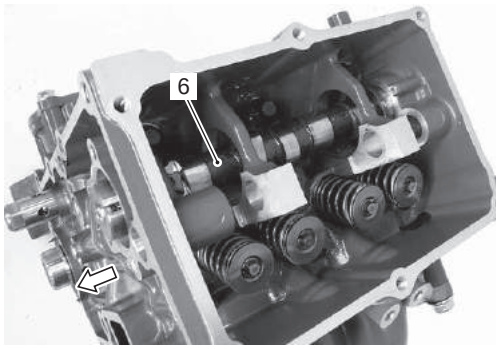

IDK111140104-01

7) Remove the camshaft oil seal (7).

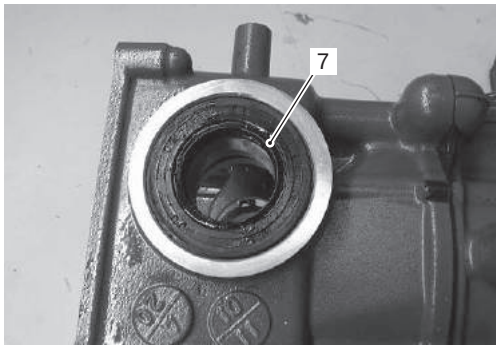

IDK111140105-01

Installation

1) Install the oil seal (1) with the spring / lipped side facing inward. Apply engine oil to oil seal lip.

NOTICE

Removing the oil seal can cause damage to the seal lips, causing oil to leak.

Do not reuse the seal once removed. Always install a new oil seal.

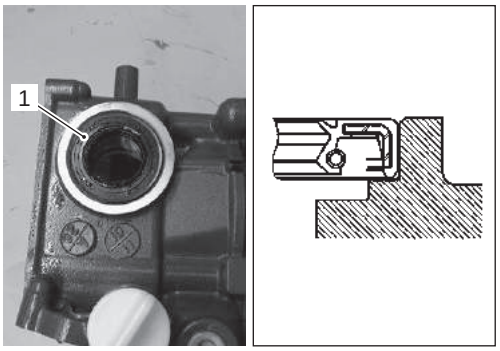

IDK111140003-02

2) Apply engine oil to the surface of each camshaft lobe and journals.
3) Install the camshaft (2) from oil pan side.

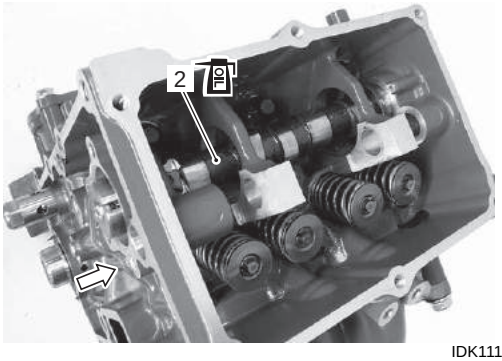

IDK111140106-01

4) Apply engine oil to the rocker arms (3) and the rocker arm shaft (4).

NOTE

Reassemble each rocker arm to its original position.

5) Install the rocker arms (3), rocker arm spring (5) and rocker arm shaft (4).

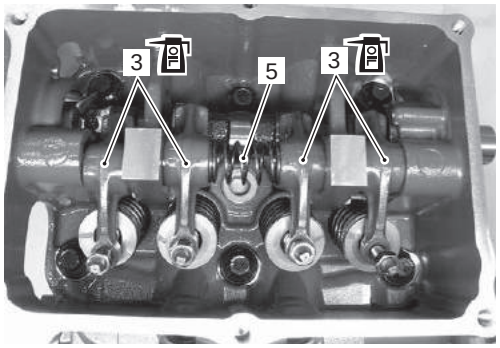

IDK111140107-01

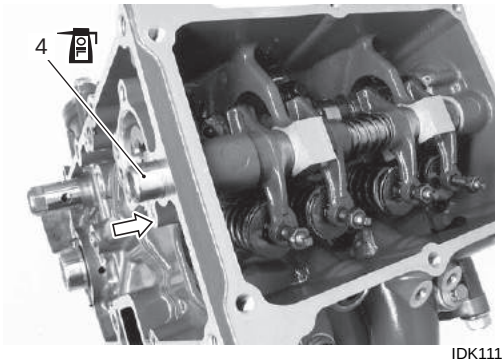

IDK111140108-01

6) Install the oil pump.
   Refer to “Oil Pump Removal and Installation” in Section 1E (Page 1E-2).
7) Install the power unit.
   Refer to “Power Unit Removal and Installation” (Page 1D-8).
8) Install the camshaft pulley.
   Refer to “Camshaft Pulley Removal and Installation” (Page 1D-7).

Camshaft, Rocker Arm and Rocker Arm Shaft Inspection

CENDK1111406009

NOTE

If any component is worn excessively, cracked, defective or damaged in any way, it must be replaced.

Cam Face

Inspect cam face for scratches and wear.
If any of the above conditions are found, replace camshaft.

Cam Wear
Using micrometer, measure cam height.
If measurement exceeds service limit, replace camshaft.

Cam height "a"

	Standard	Service limit
IN.	23.710 – 23.870 mm (0.9335 – 0.9398 in.)	23.610 mm (0.9295 in.)
EX.	23.530 – 23.690 mm (0.9264 – 0.9327 in.)	23.430 mm (0.9224 in.)

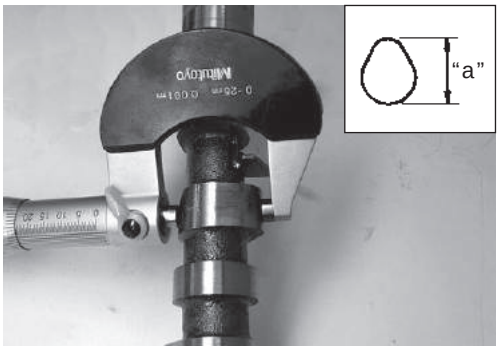

IDK111140004-02

Decompression Parts
Inspect the decompression parts on the camshaft.
If abnormal movement is found, replace the camshaft.

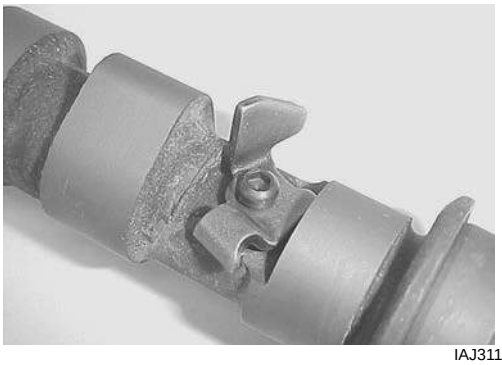
IAJ311140093-01

Camshaft Journal Oil Clearance
Using a micrometer and dial calipers, measure the journal diameters (O.D.) in two directions at two places, and journal bore diameters (I.D).
Subtract the journal diameter measurement from the journal bore measurement to determine the journal oil clearance.
If the journal oil clearance exceeds the service limit, replace camshaft and if necessary, cylinder head and/or oil pump.

Special tool
TOOL (A): 09900–20205 (Micrometer (0 – 25 mm))
TOOL (B): 09900–20605 (Dial calipers (10 – 34 mm))

Camshaft journal oil clearance
Standard (Upper): 0.020 – 0.062 mm (0.0008 – 0.0024 in.)
Standard (Lower): 0.020 – 0.062 mm (0.0008 – 0.0024 in.)
Service limit (Upper): 0.100 mm (0.0039 in.)
Service limit (Lower): 0.100 mm (0.0039 in.)

Camshaft journal outside diameter
Standard (Upper): 24.959 – 24.980 mm (0.9826 – 0.9835 in.)
Standard (Lower): 22.959 – 22.980 mm (0.9039 – 0.9047 in.)

Camshaft journal bore diameter
Standard (Upper): 25.000 – 25.021 mm (0.9843 – 0.9851 in.)
Standard (Lower): 23.000 – 23.021 mm (0.9055 – 0.9063 in.)

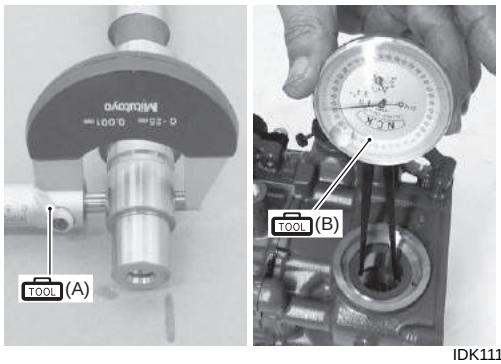

IDK111140109-01

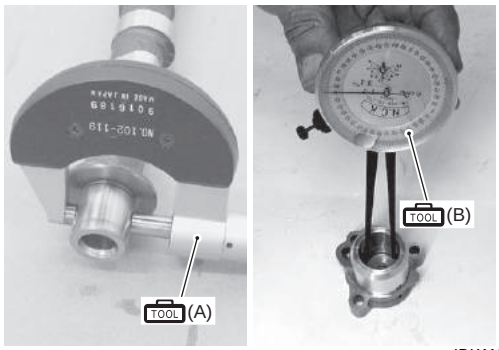

IDK111140110-01

Rocker Arm and Adjusting Screw
Inspect the rocker arm and adjusting screw.

- If the tip of adjusting screw shows excessive wear, replace the screw.
- The arm must be replaced if its cam-riding face is badly worn.

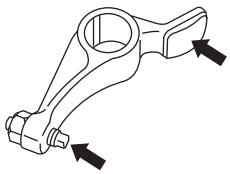
IAJ311140096-01

Rocker Arm Shaft to Rocker Arm Clearance

Using a micrometer and bore gauge, measure rocker arm shaft outside diameter and rocker arm inside diameter. The difference between the two readings is the rocker arm to arm shaft clearance. If measurement exceeds service limit, replace shaft or arm, or both.

Special tool

TOOL (A): 09900–20205 (Micrometer (0 – 25 mm))
TOOL (B): 09900–20605 (Dial calipers (10 – 34 mm))

<u>Rocker arm shaft to rocker arm clearance</u>
Standard: 0.016 – 0.045 mm (0.0006 – 0.0018 in.)
Service limit: 0.060 mm (0.0024 in.)

<u>Rocker arm shaft outer diameter</u>
Standard: 12.973 – 12.984 mm (0.5107 – 0.5112 in.)

<u>Rocker arm inside diameter</u>
Standard: 13.000 – 13.018 mm (0.5118 – 0.5125 in.)

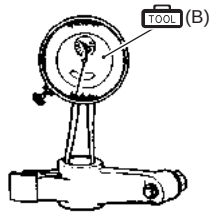

IAJ311140017-01

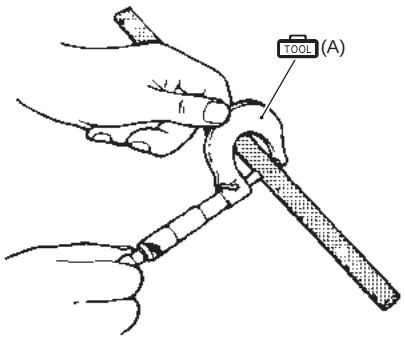

IAJ311140018-01

Cylinder Head Assembly Components

CENDK1111406010

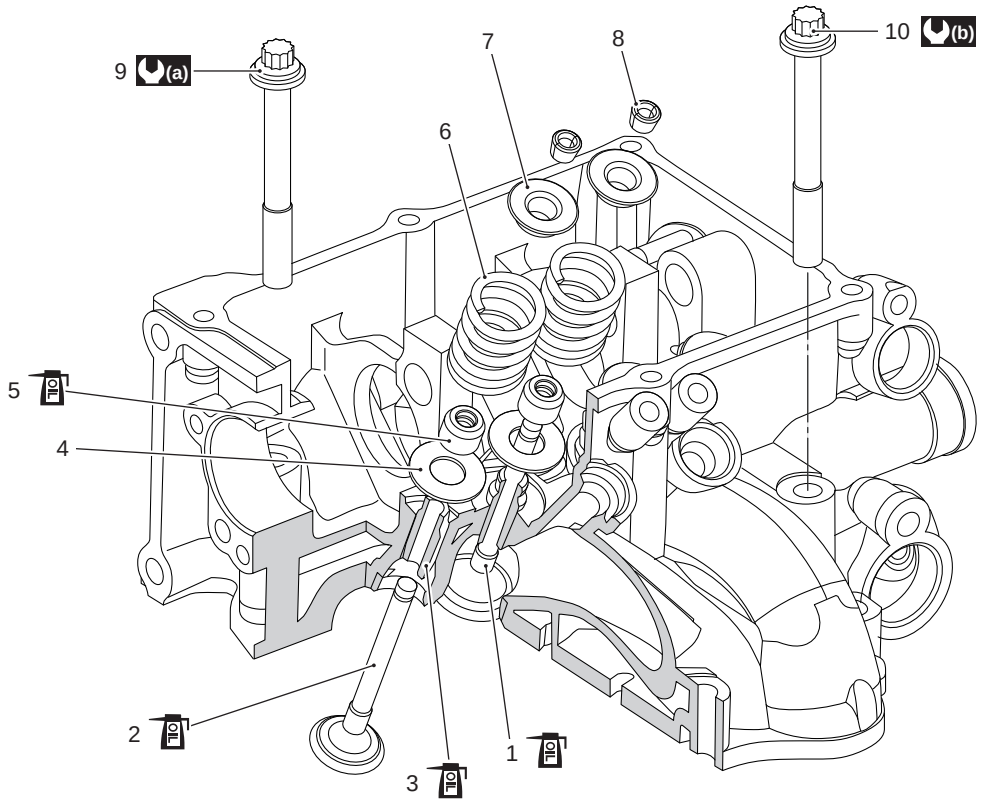

IDK111140013-01

1. Intake valve	5. Valve stem seal	9. Cylinder head bolt (Inside)	OIL : Apply engine oil.
2. Exhaust valve	6. Valve spring	10. Cylinder head bolt (Outside)	
3. Valve guide	7. Valve spring retainer	(a) : 30 N·m (3.0 kgf-m, 21.7 lbf-ft)	
4. Valve spring seat	8. Valve cotter	(b) : 30 N·m (3.0 kgf-m, 21.7 lbf-ft)	

Cylinder Head Removal and Installation

CENDK1111406011

Removal

1) Prior to removing cylinder head assembly;
   - Remove the power unit.
     Refer to “Power Unit Removal and Installation” (Page 1D-8).
   - Remove the camshaft.
     Refer to “Camshaft, Rocker Arm and Rocker Arm Shaft Removal and Installation” (Page 1D-16).
2) Loosen and remove eight cylinder head bolts in the order indicated in figure.
   Remove cylinder head assembly and head gasket.

NOTE

Use special tool (8 mm deep socket wrench) when loosening cylinder head bolts.

Special tool
TOOL (A): 09919–19910 (Deep socket wrench (8mm))

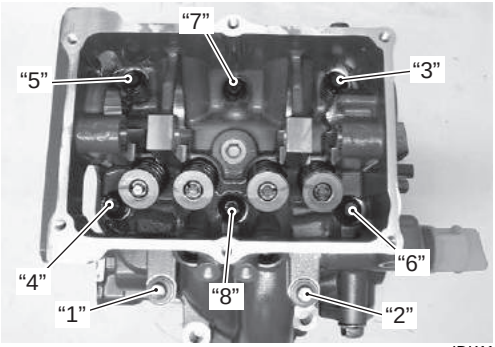

IDK111140111-01

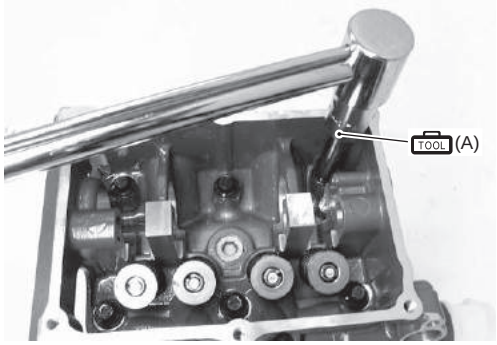

IDK111140112-01

Installation

Installation is in reverse order of removal paying special attention to the following steps.

NOTICE

A previously-used gasket may leak combustion gas and/or cooling water, resulting in engine damage.

Do not re-use gasket once removed. Always use a new gasket.

1) Insert the dowel pins (1) and place a new cylinder head gasket (2) into position on the cylinder.

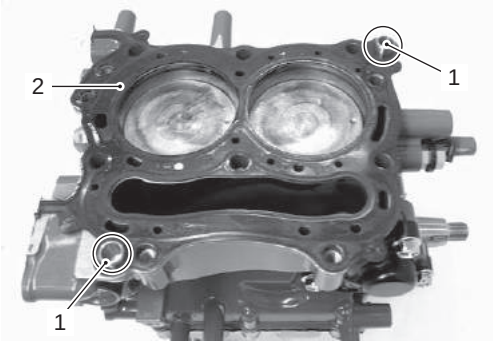

IDK111140113-01

2) Position cylinder head on cylinder.

NOTE

Use special tool (8 mm deep socket wrench) when tightening cylinder head bolts.

Special tool
TOOL (A): 09919–19910 (Deep socket wrench (8mm))

3) Apply engine oil to cylinder head inside bolts only.

NOTE

Do not apply oil to cylinder head outside bolts.

4) Lightly seat all cylinder head bolts at first.
According to tightening order in figure, tighten bolts to 1/2 of specified torque, and finally to full specified torque.

Tightening torque
Cylinder head bolt (1st step) (a): 15 N·m (1.5 kgf-m, 11 lbf-ft)
Cylinder head bolt (Final step) (a): 30 N·m (3.0 kgf-m, 21.7 lbf-ft)

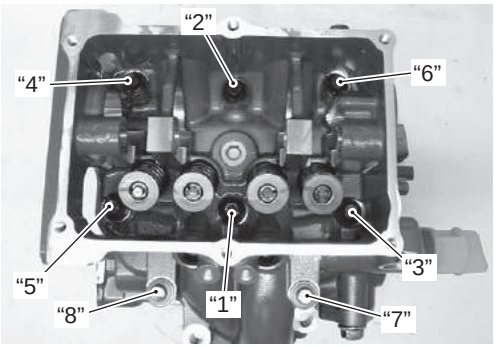

IDK111140114-02

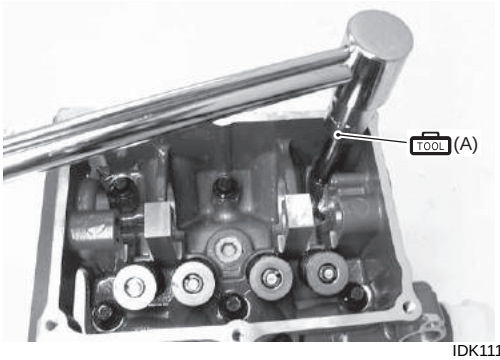

IDK111140115-01

5) Install the camshaft and rocker arms.
Refer to "Camshaft, Rocker Arm and Rocker Arm Shaft Removal and Installation" (Page 1D-16).

Cylinder Head Disassembly and Assembly

CENDK1111406012

Disassembly

1) Using valve lifter and attachment, remove valve cotters (1) while compressing valve spring.

Special tool
TOOL (A): 09916–14510 (Valve lifter)
TOOL (B): 09916–14521 (Valve lifter attachment)
TOOL (C): 09916–84511 (Tweezers)

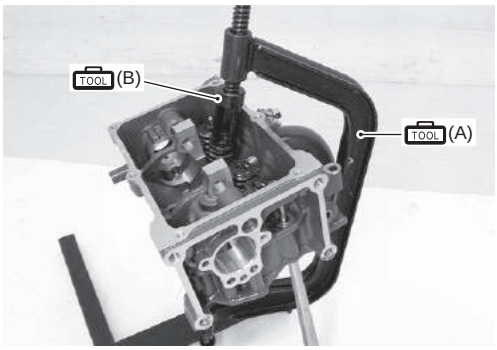

IDK111140116-01

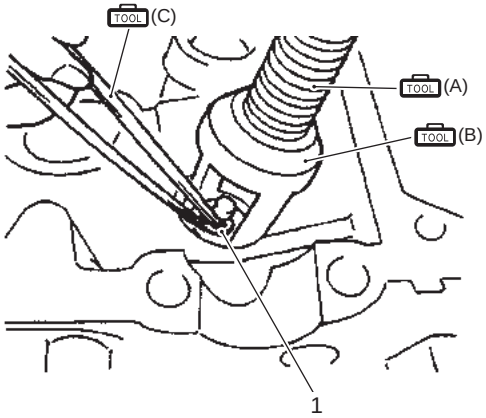

I9J011140209-01

2) Remove valve spring retainer (2), valve spring (3) and valve (4).

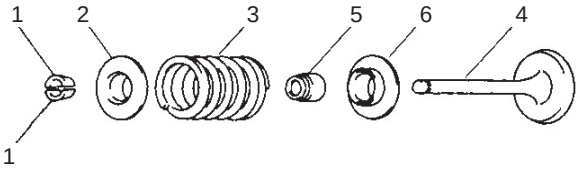

I9J011140210-01

3) Remove valve stem seal (5) and valve spring seat (6).

NOTE

Reassemble each valve and valve spring in their original positions.

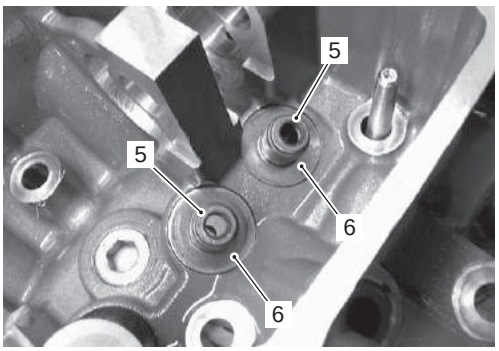

IDK111140117-01

Assembly

Reassemble in reverse order of disassembly paying special attention to the following steps.

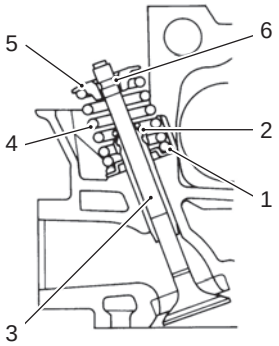

I9J011140212-03

1) Install valve spring seat (1) to cylinder head.
2) After applying engine oil to stem seal (2), then install valve stem seal onto valve guide by pushing with finger tip.

NOTICE

Removing the stem seal can be damaged, causing oil to get down past the seal.

Do not reuse stem seal once removed. Always install new seal.

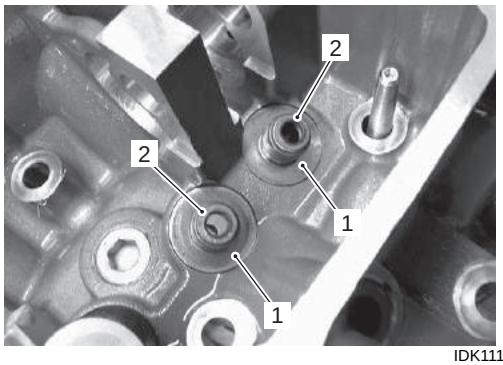

IDK111140118-01

3) Apply engine oil to stem seal, valve guide bore and valve stem.
4) Install valve (3) to valve guide.

NOTE

Reassemble each valve and valve spring to their original position.

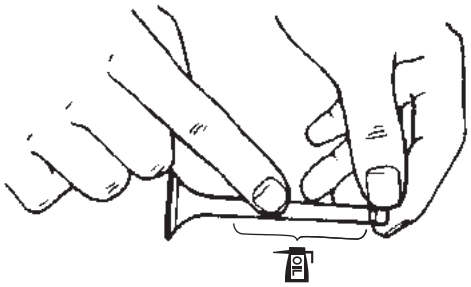

I9J011140034-01

5) Install valve spring (4), and valve retainer (5).

NOTE

Set valve spring in place with narrow spiral area facing valve seat.

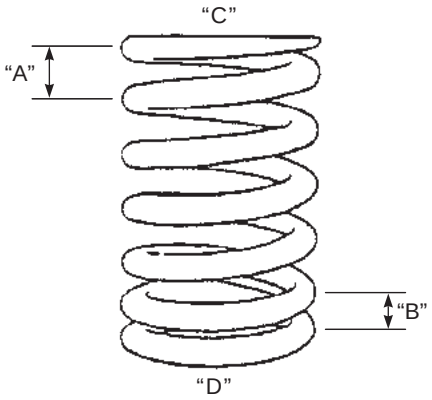

I9J011140035-01

"A": Large-pitch	"C": Valve spring retainer side
"B": Small-pitch	"D": Valve spring seat side

6) Hold valve spring compressed with special tool and install valve cotters (6).
Make sure valve cotters are properly seated in groove “A”.

Special tool
(C): 09916–14510 (Valve lifter)
(D): 09916–14521 (Valve lifter attachment)
(E): 09916–84511 (Tweezers)

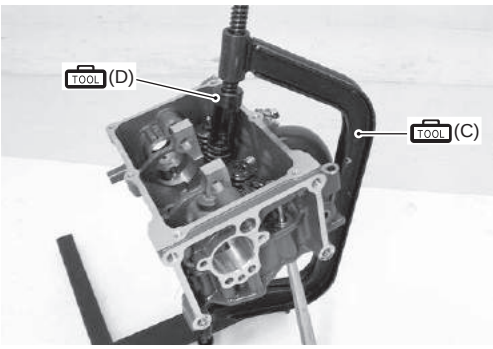

IDK111140119-01

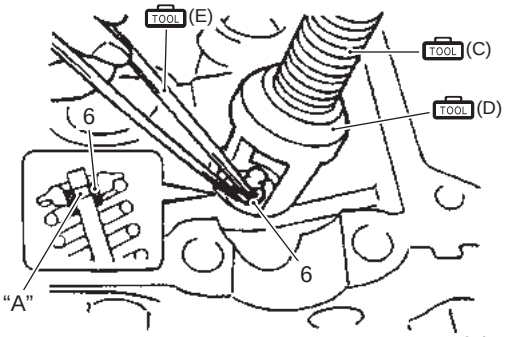

I9J011140036-02

Cylinder Head Components Inspection and Servicing

CENDK1111406013

NOTE

If cracks, excessive wear or other damage is found on any component, replace component.

Cylinder Head

- Remove all carbon from combustion chambers.

NOTE

- **Do not use any sharp edged tool to scrape carbon off cylinder head or its components.**
- **Be careful not to scuff or nick metal surfaces when decarbonizing.**

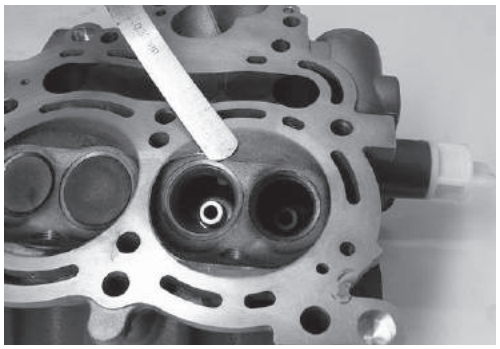

IDK111140120-01

- Check cylinder head for cracks in intake and exhaust ports, combustion chambers, and head surface.
If cracks or other damage is found, replace cylinder head.
- Check valve seat, if cracks or other damage is found, replace cylinder head.

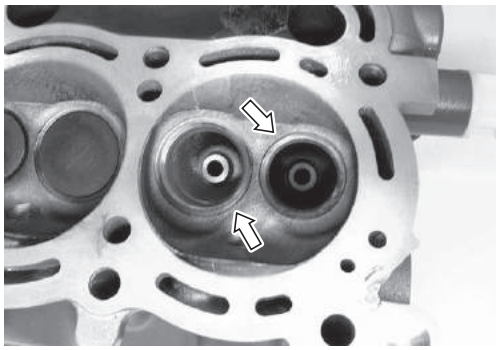

IDK111140121-01

- Check water jackets. If clogged or obstructed, clean water jackets.

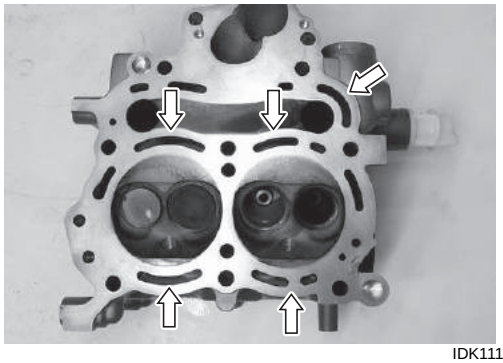

IDK111140122-01

Cylinder head distortion

NOTE

Distorted mating surface of cylinder head and cylinder head gasket causes combustion gas and/or cooling water to leak, which may result in overheating and reduced power output.

- Using a straightedge and thickness gauge, measure cylinder head distortion (gasket surface) at a total of six locations as shown.
  If measurement exceeds service limit, resurface or replace cylinder head.

Special tool
TOOL (A): 09900–20803 (Thickness gauge)

Cylinder head distortion
Service limit: 0.06 mm (0.002 in.)

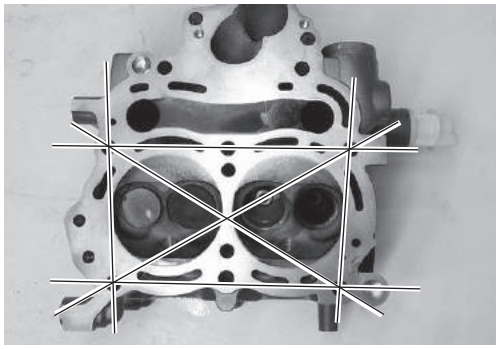

IDK111140123-01

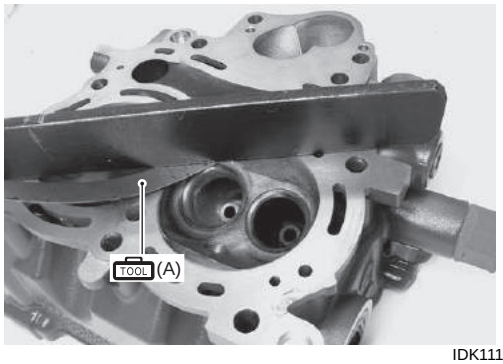

IDK111140124-01

NOTE

Cylinder head can be resurfaced, using a surface plate and #400 grit wet sandpaper. Move the cylinder head in a figure eight pattern when sanding.

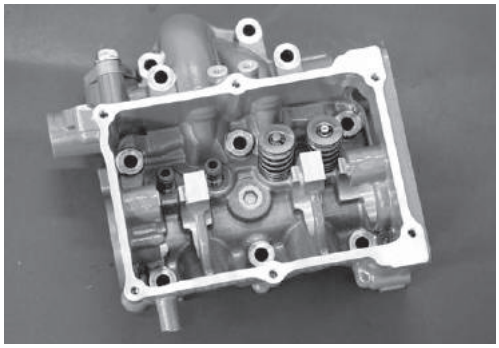

IDK111140125-01

Valve and Valve Guide

Valve guide to valve stem clearance
Using a micrometer and bore gauge, take diameter readings on valve stems and guides to check guide to stem clearance.
Be sure to take readings at more than one place along the length of each stem and guide.
If measurement exceeds service limit, replace valve and/or valve guide. Refer to “Valve guide replacement” (Page 1D-28).

Special tool
TOOL (A): 09900–20205 (Micrometer (0 – 25 mm))

Valve stem outside diameter
Using micrometer, measure valve stem outside diameter.

Valve stem outside diameter
Standard (IN.): 5.475 – 5.490 mm (0.2156 – 0.2161 in.)
Standard (EX.): 5.450 – 5.465 mm (0.2146 – 0.2152 in.)

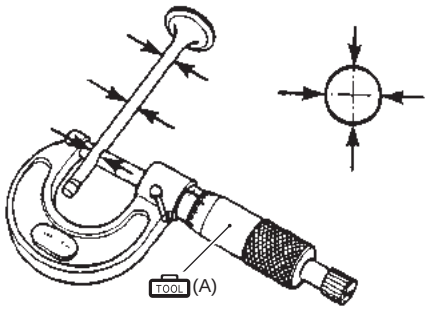

I9J011140039-02

Valve guide inside diameter
Using a small bore gauge, measure valve guide inside diameter.

Valve guide inside diameter
Standard (IN.): 5.500 – 5.512 mm (0.2165 – 0.2170 in.)
Standard (EX.): 5.500 – 5.512 mm (0.2165 – 0.2170 in.)

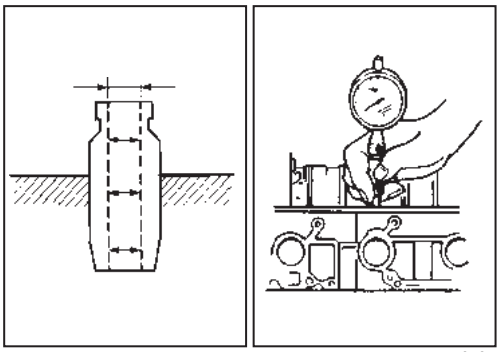

I9J011140040-01

Valve guide to valve stem clearance
Standard (IN.): 0.010 – 0.037 mm (0.0004 – 0.0015 in.)
Standard (EX.): 0.035 – 0.062 mm (0.0014 – 0.0024 in.)
Service limit (IN.): 0.070 mm (0.0028 in.)
Service limit (EX.): 0.090 mm (0.0035 in.)

Valve stem deflection
If unable to measure valve guide inside diameter, check “Valve stem deflection”.
If measurement exceeds service limit, replace valve.
If measurement still exceeds service limit with new valve, replace valve guide.
Measure valve stem deflection as follows;

1) Install valve into valve guide.
2) Position valve head at approx. 5 mm away from valve seat.
3) Move valve head in the direction “a” – “b”, and measure deflection.

Special tool
(A): 09900–20606 (Dial gauge)
(B): 09900–20701 (Magnetic stand)

Valve stem deflection
Service limit (IN.): 0.14 mm (0.006 in.)
Service limit (EX.): 0.18 mm (0.007 in.)

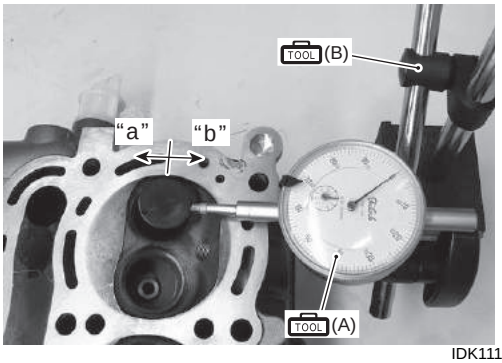

IDK111140126-01

Valve stem end
Inspect valve stem end face for pitting and wear.
If pitting or wear is found, valve stem end may be resurfaced.
Use caution when resurfacing, do not grind away stem end chamfer.
When chamfer has been worn away, replace valve.

I9J011140041-01

Valve stem runout
Measure valve stem runout.
If measurement exceeds service limit, replace valve.

Special tool
(A): 09900–20606 (Dial gauge)
(B): 09900–20701 (Magnetic stand)
(C): 09900–21304 (Steel “V” block set)

Valve stem runout
Service limit: 0.05 mm (0.0020 in.)

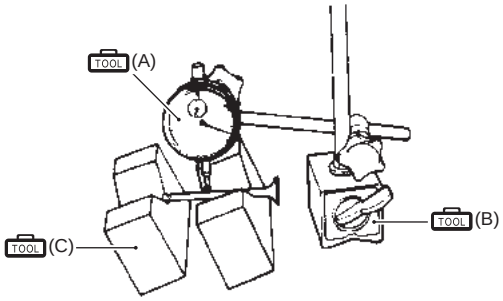

I9J011140042-02

Valve head radial runout
Measure valve head radial runout.
To measure runout, rotate valve slowly.
If measurement exceeds service limit, replace valve.

Special tool
(A): 09900–20606 (Dial gauge)
(B): 09900–21304 (Steel "V" block set)
: 09900–20701 (Magnetic stand)

Valve head radial runout
Service limit: 0.08 mm (0.003 in.)

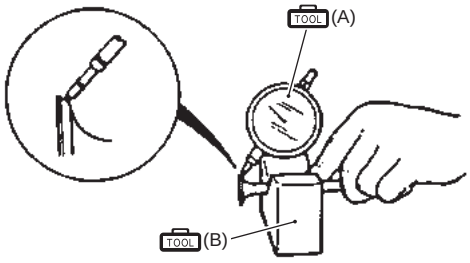

I9J011140043-03

Valve head thickness
Measure thickness "a" of valve head.
If measurement exceeds service limit, replace valve.

Special tool
: 09900–20101 (Vernier calipers (150 mm))

Valve head thickness
Service limit (IN.): 0.5 mm (0.02 in.)
Service limit (EX.): 0.5 mm (0.02 in.)

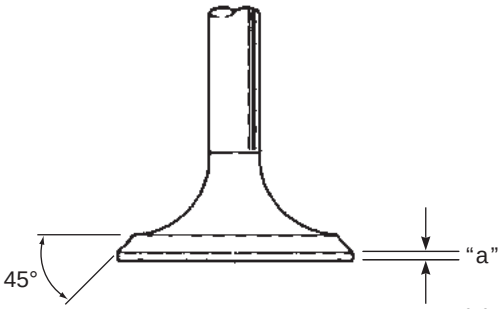

I9J011140044-01

Valve seat contact width
Measure valve seat contact width as follows:

1) Remove all carbon from valve and seat.
2) Coat valve seat evenly with Prussian blue (or equivalent).
3) Install valve into valve guide.
4) Put valve lapper on valve.

Special tool
(A): 09916–10911 (Valve lapper)

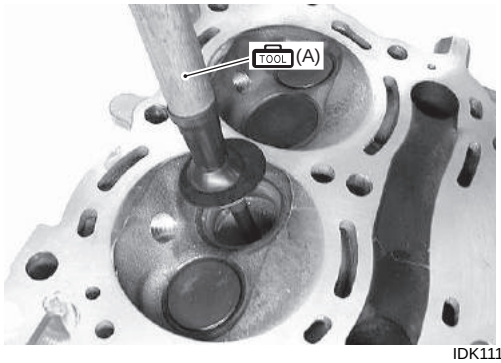

IDK111140127-01

5) Rotate valve while gently tapping valve contact area against seat.
6) Continue until a pattern is on valve seat face with prussian blue.
7) Measure valve seat contact width "b".

Special tool
: 09900–20101 (Vernier calipers (150 mm))

Valve seat contact width "b"
Standard (IN., EX.): 0.9 – 1.1 mm (0.035 – 0.043 in.)

If measurement exceeds specification, repair valve seat. Refer to "Valve seat servicing" (Page 1D-27).

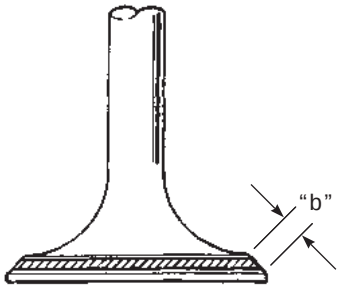

I9J011140045-01

Valve seat servicing
If valve seat contact width is out of specification, reface valve seat as follows:

Valve seat angle
Intake side: 15° / 45°
Exhaust side: 15° / 45°

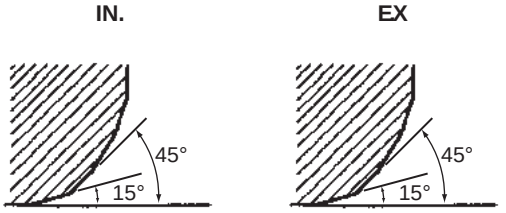

IAJ311140015-01

To reface a valve seat, use the following valve seat cutting tool.

- Valve seat cutter 45° (Neway 122)
- Valve seat cutter 15° (Neway 121)
- Solid pilot (Neway, N-100-5.52) (09916-24450)
- Handle (Neway, N-505) (09916-54910)

NOTE

Turn cutter clockwise, never counterclockwise.

1) Remove all carbon from valve and valve seat.
2) Using 45° angle cutter, reface valve seat.
3) Check valve seat contact width “a”.
   Refer to “Valve seat contact width” (Page 1D-26).

Too high (wide)

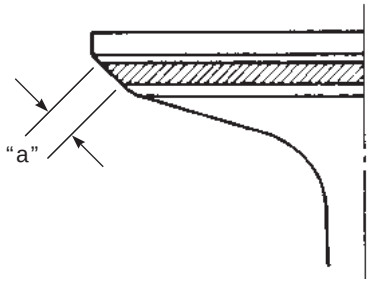

I9J011140047-01

Too low (narrow)

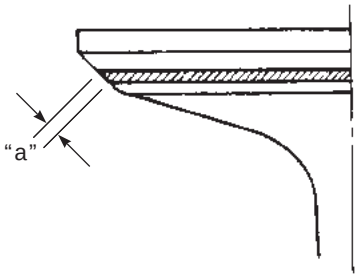

I9J011140048-01

- If width “a” is too high (or wide), reface valve seat using small angle cutter.
- If width “a” is too low (or narrow), reface valve seat using 45° angle cutter.

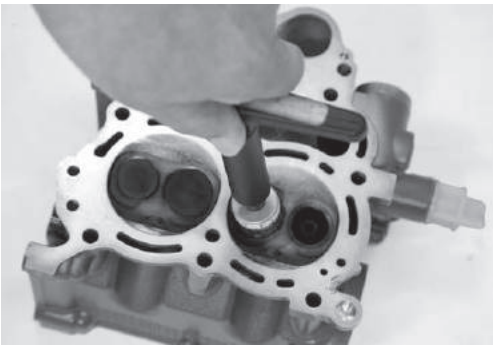
IDK111140128-01

4) Clean up any burrs using 45° angle cutter very lightly.
5) Lap valve on seat in two steps, first with coarse grit lapping compound applied to face and the second with fine grit compound.
6) Recheck valve seat contact width “a”.

NOTE

Clean and assemble cylinder head and valve components.
Fill intake and exhaust ports with solvent to check for leaks between valve seat and valve.
If any leaks occur, inspect valve seat and face for burrs or other things that could prevent valve from sealing.

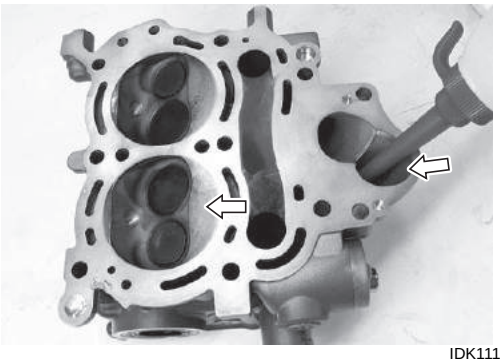
IDK111140129-01

Valve guide replacement

NOTE

Be careful not to damage cylinder head when replacing valve guide.

1) Using valve guide remover, drive valve guide out from combustion chamber side towards valve spring side.

NOTE

Do not reuse valve guide once it has been removed.
Always use a new valve guide (oversize) when assembling.

Special tool
TOOL (A): 09916–44910 (Valve guide remover)

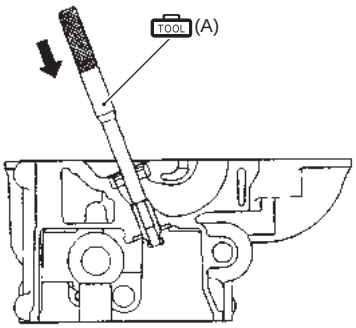

IDK111140015-01

2) Ream valve guide hole with ø 11 mm reamer to true hole and remove burrs.

NOTICE

Improper handling of the reamer will cause damage to the valve guide hole.

When refinishing or removing the reamer from the valve guide hole, always turn it clockwise.

Special tool
TOOL (B): 09916–38210 (Valve guide reamer (ø 11 mm))
TOOL (C): 09916–34542 (Valve guide reamer handle)

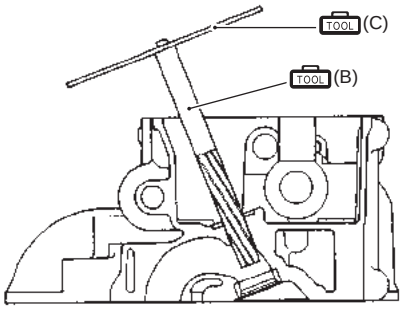

IDK111140016-01

3) Drive valve guide in from valve spring side to the specified height.
Measure valve guide protrusion “a”.

Special tool
TOOL (A): 09916–44910 (Valve guide remover)
TOOL : 09900–20101 (Vernier calipers (150 mm))

Valve guide protrusion “a”
Standard (IN., EX.): 9.8 – 10.2 mm (0.39 – 0.40 in.)

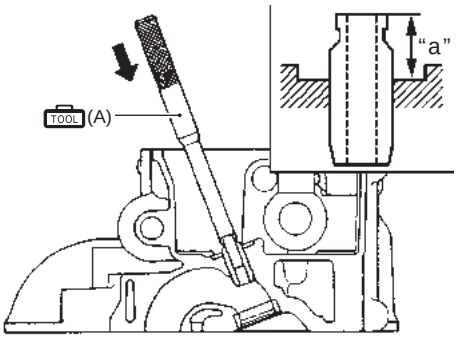

IDK111140017-01

4) Ream valve guide bore with ø 5.5 mm reamer.

NOTE

Clean and oil valve guide bore after reaming.

Special tool
TOOL (D): 09916–34550 (Valve guide reamer (ø 5.5 mm))
TOOL (C): 09916–34542 (Valve guide reamer handle)

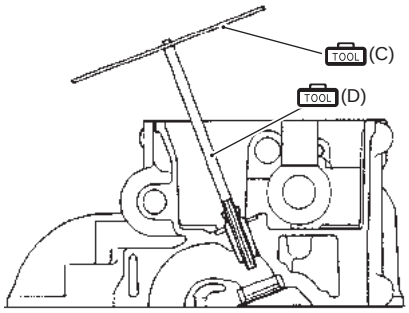

IDK111140018-01

Valve spring free length
Check spring strength by measuring free length.
If lower than service limit, replace valve spring.

Special tool
TOOL (A): 09900–20101 (Vernier calipers (150 mm))

Valve spring free length
Standard (IN., EX.): 33.16 mm (1.31 in.)
Service limit (IN., EX.): 31.5 mm (1.24 in.)

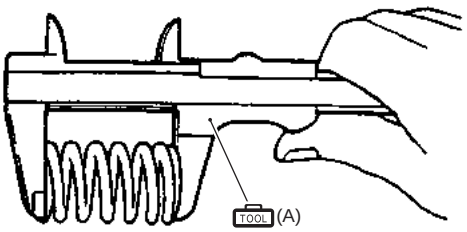

I9J011140054-02

Valve spring preload
Measure valve spring preload.
If lower than service limit, replace valve spring.

Special tool
TOOL : 09900–20101 (Vernier calipers (150 mm))

Valve spring preload
Standard (IN., EX.): 82 – 95 N (8.2 – 9.5 kg, 18 – 21 lbs.) at 28.5 mm (1.12 in.)
Service limit (IN., EX.): 75 N (7.5 kg, 16.5 lbs.) at 28.5 mm (1.12 in.)

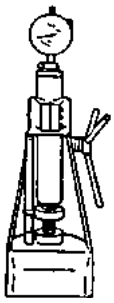
I9J011140055-01

Valve spring squareness
Use a square and surface plate to check each spring for squareness (clearance between end of valve spring and square).
If measurement exceeds service limit, replace valve spring.

Special tool
TOOL : 09900–20101 (Vernier calipers (150 mm))

Valve spring squareness “a”
Service limit (IN., EX.): 1.0 mm (0.04 in.)

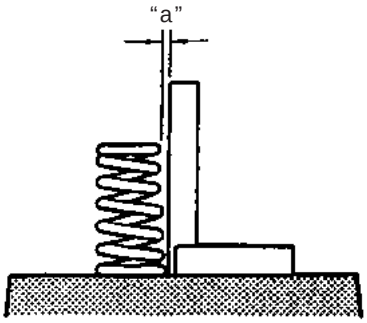

I9J011140056-02

Pistons, Piston Rings, Connecting Rods, Cylinder and Crankshaft Components

CENDK1111406014

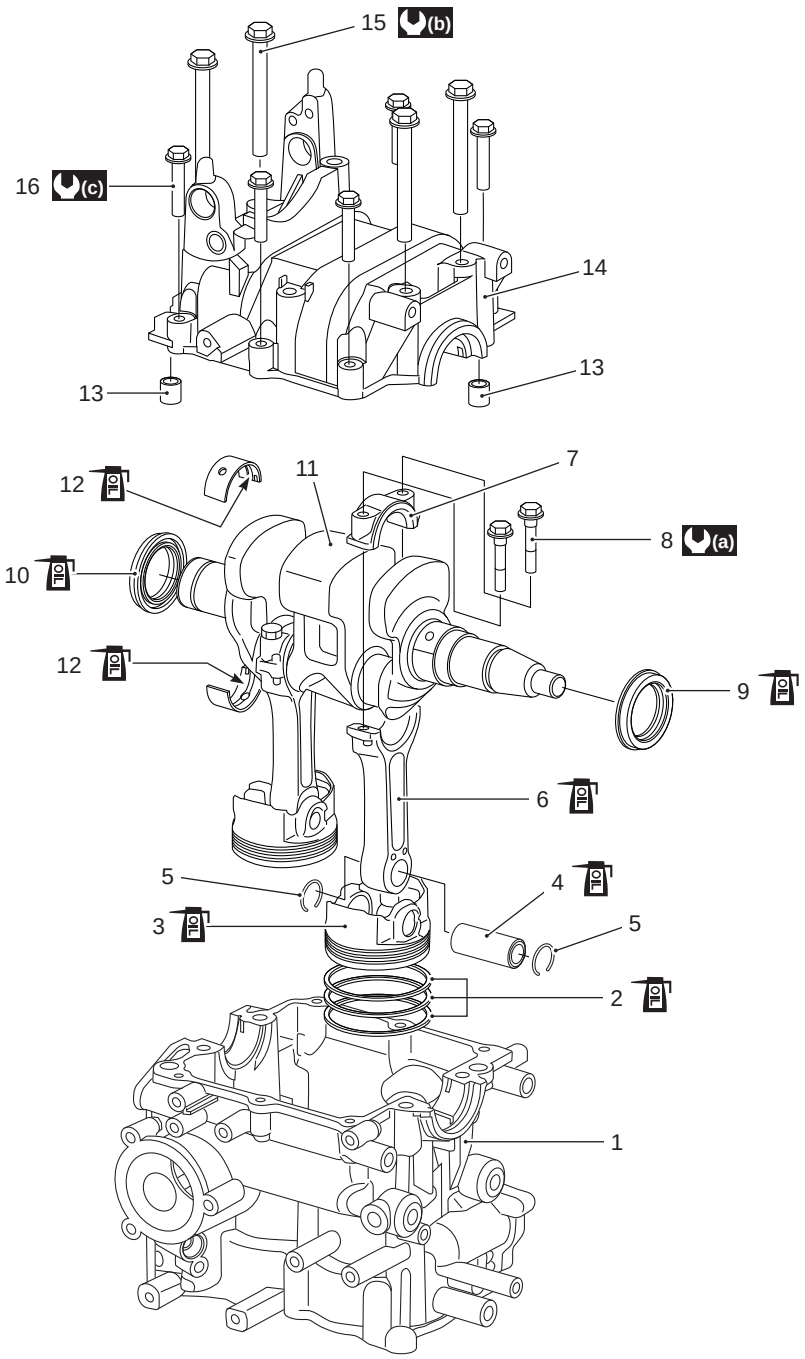

IDK111140019-03

1. Cylinder block	6. Conrod	11. Crankshaft	16. Bolt (6 mm)
2. Piston ring set	7. Conrod cap	12. Crankshaft main bearing	(a) : 10 N·m (1.0 kgf-m, 7.2 lbf-ft)
3. Piston	8. Conrod bolt	13. Dowel pin	(b) : 25 N·m (2.5 kgf-m, 18.0 lbf-ft)
4. Piston pin	9. Oil seal	14. Crankcase	(c) : 10 N·m (1.0 kgf-m, 7.2 lbf-ft)
5. Circlip	10. Oil seal	15. Bolt (8 mm)	OIL : Apply engine oil.

Pistons, Piston Rings, Connecting Rods, Cylinder and Crankshaft Disassembly and Assembly

CENDK1111406015

Disassembly

1) Before performing service work in this section:
   - Remove power unit.
     Refer to “Power Unit Removal and Installation” (Page 1D-8).
   - Remove cylinder head.
     Refer to “Cylinder Head Removal and Installation” (Page 1D-20).
2) Remove oil pressure switch (1).

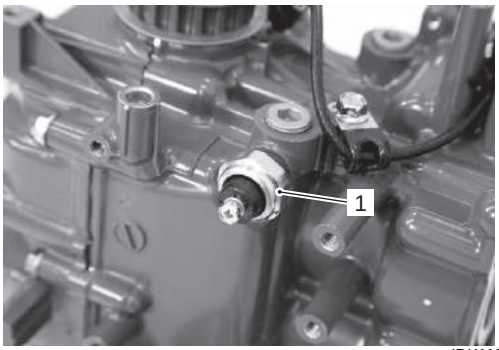

IDK111140130-01

3) Remove screws (2), oil filter cap (3) and oil filter (4).

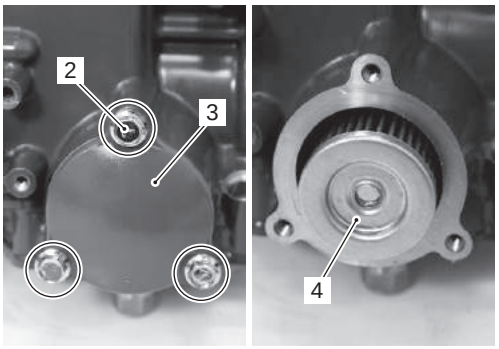

IDK111140131-01

4) Remove the cylinder temp. sensor (5).

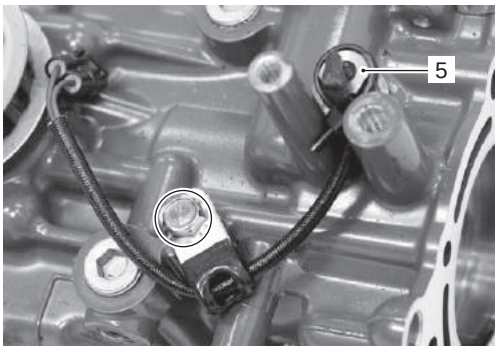

IDK111140132-01

5) Remove the thermostat cover (6) and thermostat. Refer to “Thermostat Removal and Installation” in Section 1F (Page 1F-3).

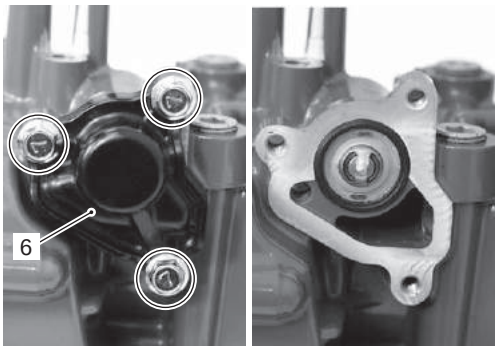

IDK111140133-01

6) Remove the oil relief valve (7).

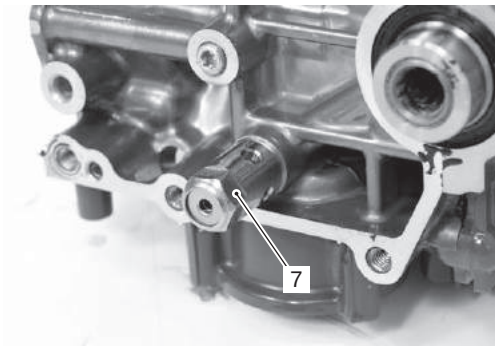

IDK111140134-01

7) Using flat blade screw driver, drive locking edges of lock washer (9) downward, and then remove timing pulley nut (8).

NOTE

The pulley nut has been applied the thread lock cement.
Slightly tap the pulley nut to counterclockwise using a flat screw driver and a hammer before loosening the nut.

Special tool
TOOL (A): 09911–48900 (Crankshaft holder)

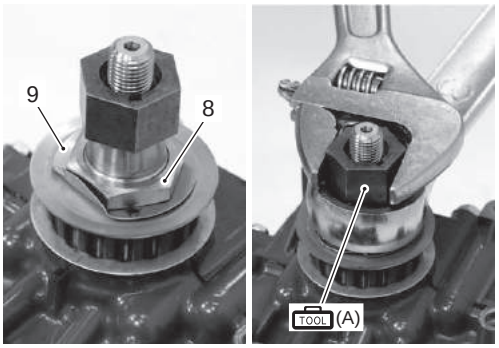

IDK111140135-01

8) Remove the lock washer (9), upper guide (10), timing pulley (11), key (12) and lower guide (13).

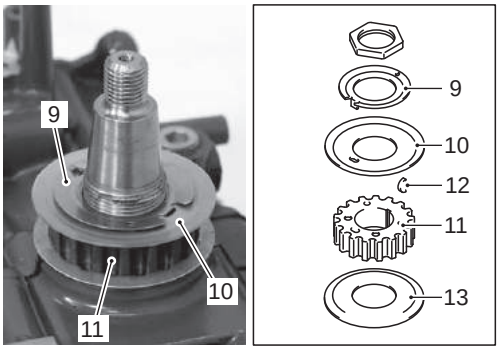

IDK111140006-03

9) Remove ten bolts (14).
Remove crankcase (15) from cylinder block.

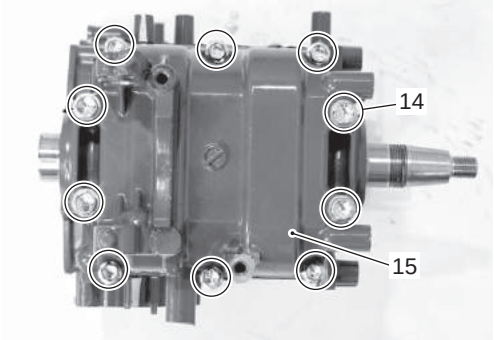

IDK111140136-01

NOTE

For proper assembly, mark cylinder number on all pistons, conrods, and conrod caps, using quick drying paint.

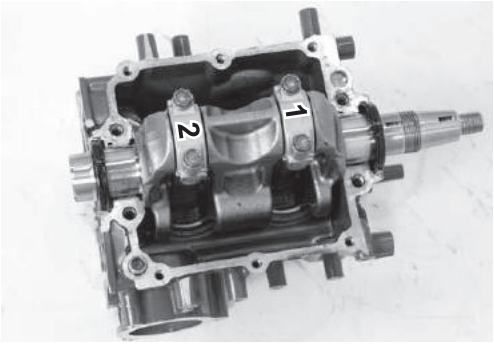

IDK111140137-01

10) Remove all conrod cap bolts (16) and conrod caps (17).

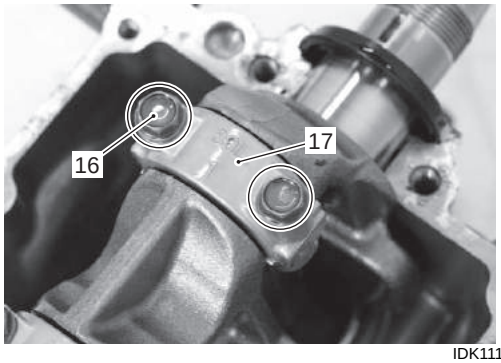

IDK111140138-01

11) Remove crankshaft (18).
Remove oil seals (19) from crankshaft.

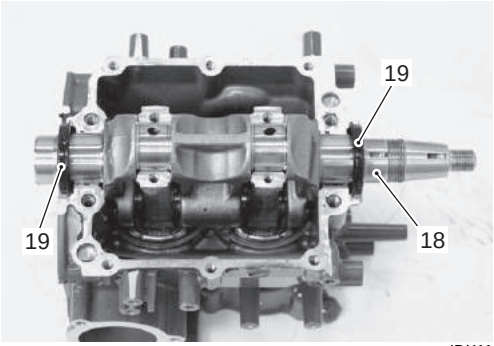

IDK111140139-01

12) Mark cylinder number on pistons using quick dry paint.
Push piston (with conrod) out through the top of cylinder bore.

NOTE

- **To prevent damage to piston rings, decarbon top of cylinder bore wall before removing piston.**
- **Reassemble each conrod cap to its original position after removing piston from bore.**

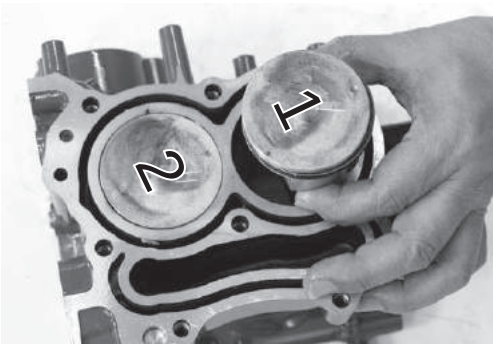

IDK111140140-01

13) Remove two compression rings (top and 2nd) and oil ring from piston. Mark cylinder number on conrod using quick dry paint.

IDK111140141-01

14) Remove piston pin circlips (20) as shown.

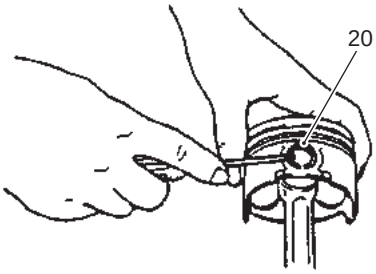

IDK111140020-01

15) Remove piston pin from conrod.

NOTE

Reassemble each piston, piston pin and conrod in their original combination and position.

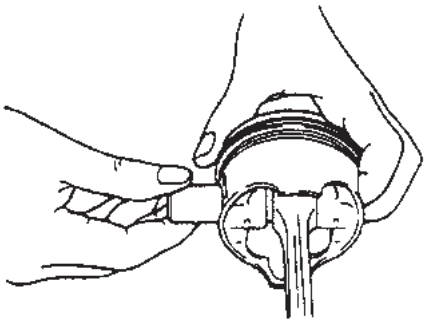

I9J011140058-01

Assembly

Assembly is reverse order of disassembly paying special attention to the following steps.

NOTICE

If any of the parts is reinstalled into a position different from the original position, engine problems could occur.

If original components are not replaced, each piston, piston pin and conrod is to be assembled and installed in its original order and position.

Piston to conrod

- Apply engine oil to piston pin (1), piston pin bore and conrod (2).
- Assemble conrod (2) to piston (3) as shown in figure and insert piston pin (1) through piston and conrod.
- Install piston pin circlips (4).

NOTE

- **Make sure conrod is installed in direction as shown in figure.**
- **Always use new piston pin circlip.**
- **Install so that circlip end gap comes within such range as indicated by arrow. End gap of the circlip should not be aligned with the cutaway in the piston pin bore.**

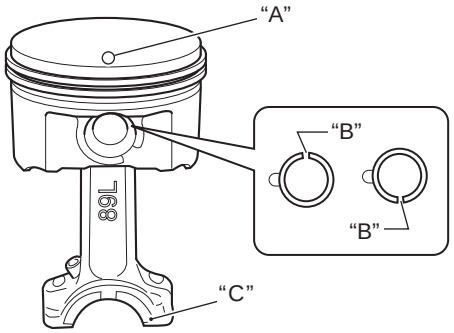

IDK111140007-02

"A": Up mark	"C": Match mark
"B": Circlip end gap direction	

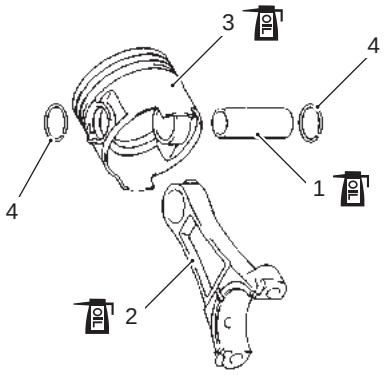

IAJ311140004-01

Piston ring to piston

1) Install the oil ring.
   - Apply engine oil to piston rings.
   - Install spacer (1) first, then side rails (2) to piston.

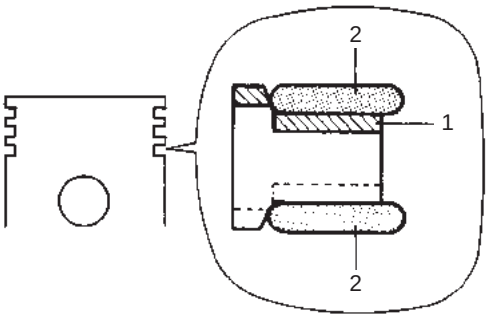

I9J011140011-01

NOTE

When installing spacer, do not allow spacer ends to overlap in groove.

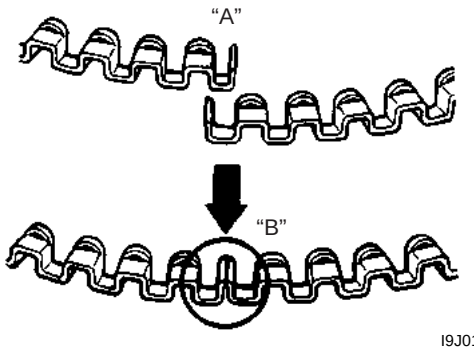

I9J011140012-01

"A": Incorrect	"B": Correct

2) Install the piston rings.
   - Apply engine oil to piston ring.
   - Install 2nd ring (3) and 1st ring (4) to piston.

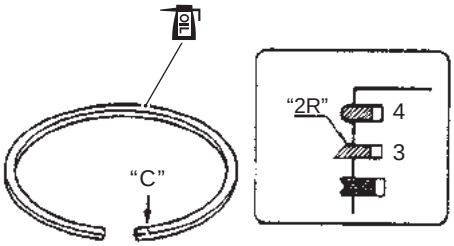

IDK111140008-01

NOTE

- **1st ring (4) and 2nd ring (3) differ in shape and color as shown in figure.**
- **As indicated in figure, 1st and 2nd ring are marked, "1R" or "2R".**
  When installing these piston rings, the marked side of each ring must face towards top of piston.

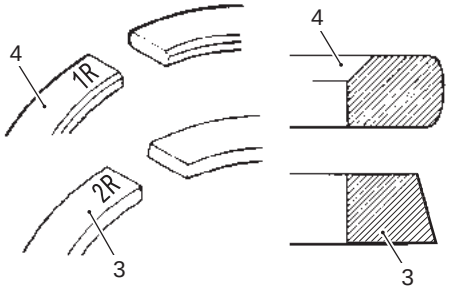

IDK111140009-01

3) Position piston rings so gaps are staggered at approximately 90 degree angles as shown.

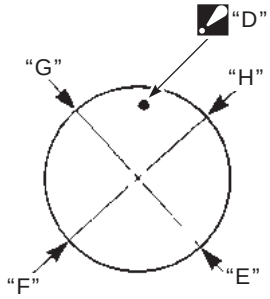

I9J011140016-01

"D": Up mark	"G": 2nd ring
"E": 1st ring	"H": Oil ring upper side rail
"F": Oil ring lower side rail	

Piston to cylinder

1) Apply engine oil to piston and cylinder walls.
2) Insert piston and conrod assembly (1) into cylinder bore from cylinder head side using piston ring compressor.

Special tool
TOOL (A): 09916–77310 (Piston ring compressor)

NOTE

Position the circle mark “A” on piston head to flywheel side “B”.

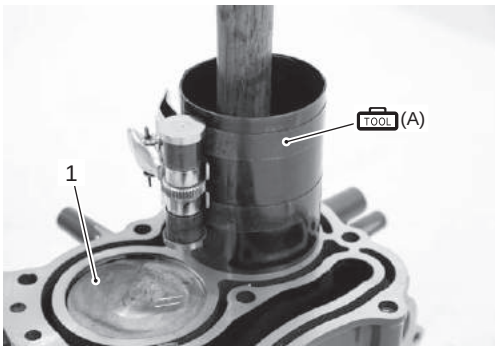

IDK111140142-02

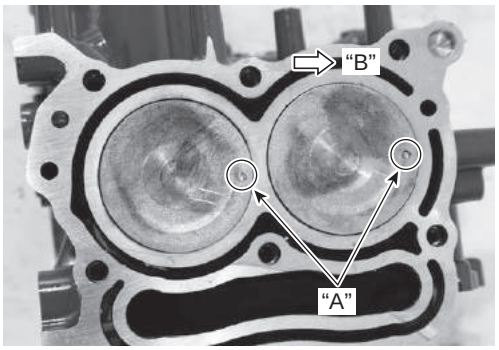

IDK111140143-02

Crankshaft to cylinder

Install crankshaft main bearings (1) in cylinder and crankcase.
Apply engine oil to bearings.

NOTICE

If the bearing is reinstalled into a position different from the original position, engine problems could occur.

If original bearings are not replaced, assemble each bearing to its original position.

NOTICE

If oil is present between the bearing’s outside surface and crank bearing holder surface, the bearing could heat up to very high temperature, resulting in seizure.

Be sure to thoroughly wipe off any trace of oil that is present between the bearing’s outside surface and crank bearing holder surface.

NOTE

Align bearing tab “A” with notch in cylinder and crankcase.

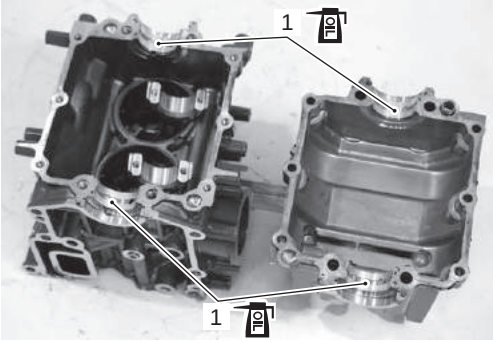

IDK111140144-01

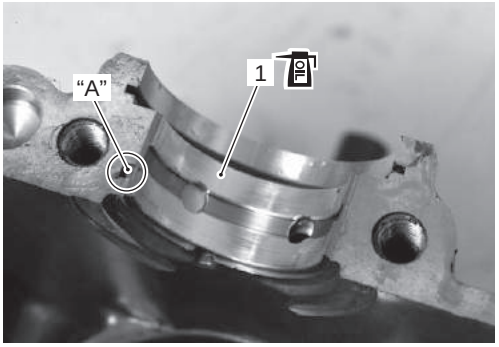

IDK111140145-01

Crankshaft

NOTE

Replace the oil seal with new one.

NOTE

Install oil seal with its spring / lipped side facing inward.

1) Apply engine oil to oil seal lip.
   Install upper oil seal (1) and lower oil seal (2) to crankshaft.
2) Apply engine oil to crank pin and crankshaft main journal and install crankshaft in cylinder.

NOTE

When installing crankshaft to cylinder, be sure to fit tab of seal in groove of cylinder.

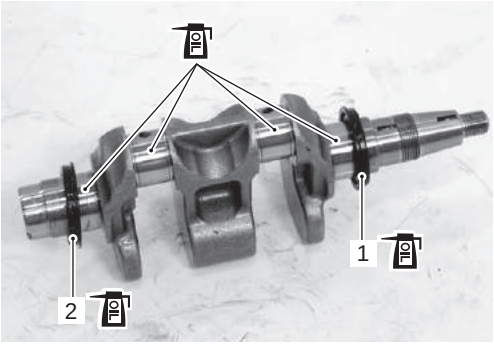

IDK111140146-01

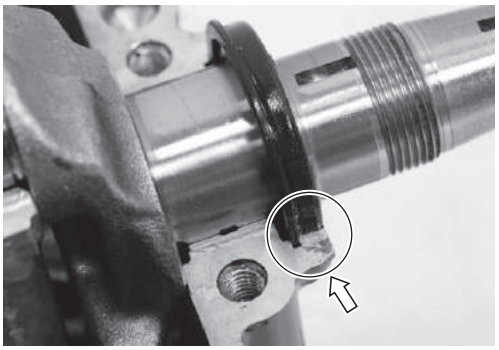

IDK111140147-01

3) Apply engine oil to conrod cap (3).
   Install conrod cap (3) to conrod.
4) Apply engine oil to conrod cap bolts (4) and tighten conrod cap bolts in two steps.

Tightening torque
Conrod cap bolt [1st step] (a): 5 N·m (0.5 kgf-m, 3.5 lbf-ft)
Conrod cap bolt [Final step] (a): 10 N·m (1.0 kgf-m, 7.2 lbf-ft)

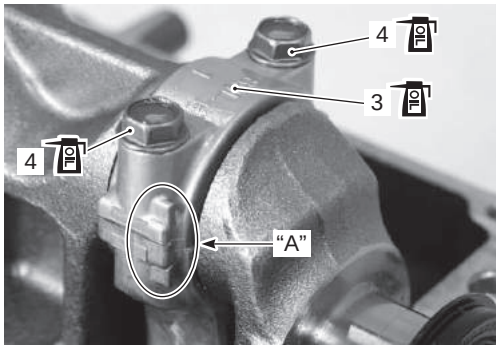

IDK111140148-01

"A": Match mark

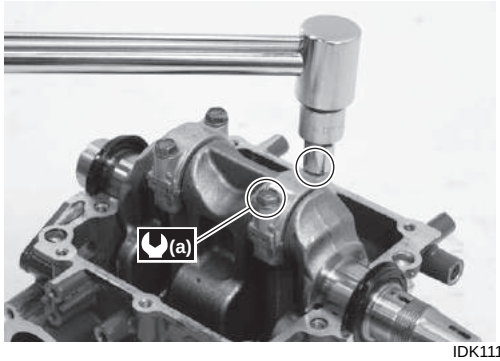

IDK111140149-01

5) Pour approx. 2 ml of engine oil to each side surface of the conrod big end for initial lubrication.

Crankcase to cylinder

1) Clean mating surface of cylinder and crankcase. Apply Suzuki bond to mating surface of crankcase as shown.

NOTE

Apply bond to mating surface only.
Do not allow bond to contact surface of bearing and groove for the oil seal tab.

1207B : Sealant 99000–31140 (SUZUKI Bond 1207B (100 g))

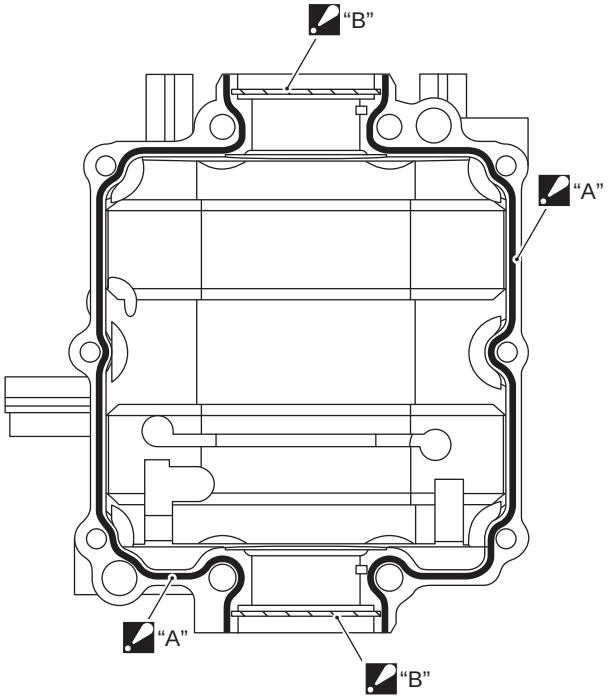

"A" : Apply bond " ▬ " marked area.

"B" : Do not apply bond " ▨ " marked area.

IDK111140021-02

2) Install two dowel pins (1).

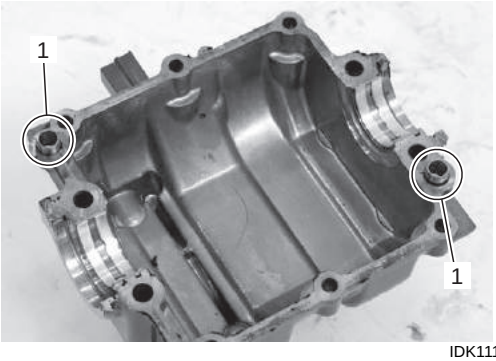

IDK111140150-01

3) Install crankcase to cylinder.
Apply engine oil lightly to 8 mm (0.31 in.) crankcase inside bolts only.

NOTE

Do not apply oil to 6 mm (0.23 in.) crankcase outside bolts.

4) Tighten crankcase bolts in two steps following the order indicated below.

Tightening torque
Crankcase inside bolt (8 mm thread diameter)
[1st step]: 13 N·m (1.3 kgf-m, 9.3 lbf-ft)
Crankcase outside bolt (6 mm thread diameter)
[1st step]: 5 N·m (0.5 kgf-m, 3.6 lbf-ft)
Crankcase inside bolt (8 mm thread diameter)
[Final step]: 25 N·m (2.5 kgf-m, 18.0 lbf-ft)
Crankcase outside bolt (6 mm thread diameter)
[Final step]: 10 N·m (1.0 kgf-m, 7.2 lbf-ft)

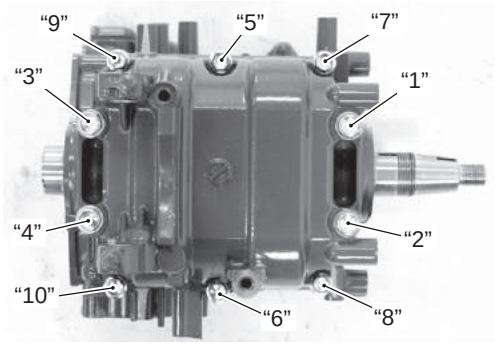

IDK111140151-01

NOTE

After tightening crankcase bolts, check to be sure that crankshaft rotates smoothly when turned by hand.

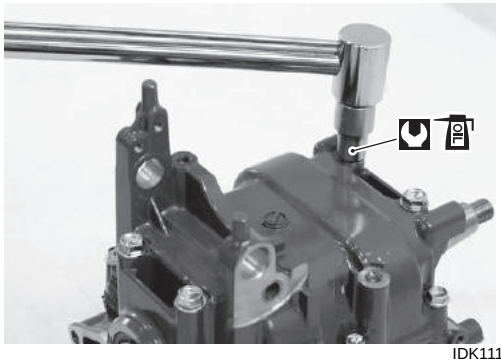

IDK111140152-01

Timing pulley

1) Install lower guide (1).
2) Install key (2).
3) Install timing pulley (3) and upper guide (4) with direction as shown.
4) Install lock washer (5) with direction as shown.

NOTE

- **Timing pulley direction:**
  Position the PUNCH mark to the upper side.
- **Belt guide direction:**
  Install the belt guides with flanges towards outside.

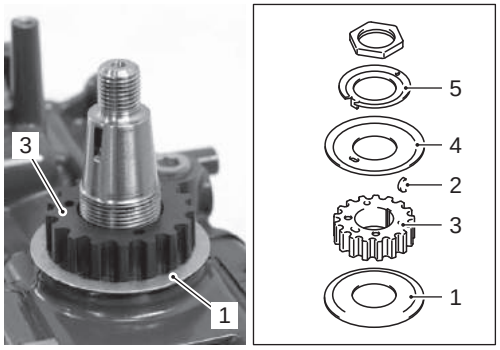

IDK111140010-02

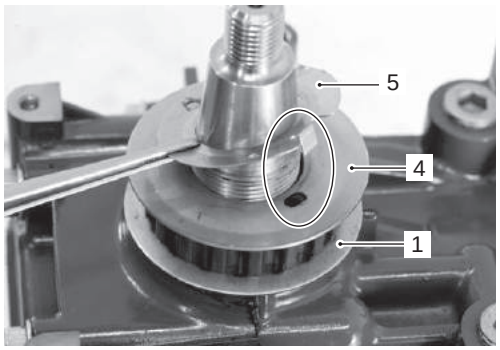

IDK111140153-01

5) Apply thread lock to timing pulley nut (6).

1342 : Thread lock cement 99000–32050 (SUZUKI Thread Lock 1342 (50 g))

6) Install timing pulley nut (6).
   Tighten timing pulley nut to specified torque using special tool.

Special tool
TOOL (A): 09911–48900 (Crankshaft holder)

Tightening torque
Timing pulley nut (a): 50 N·m (5.0 kgf-m, 36.0 lbf-ft)

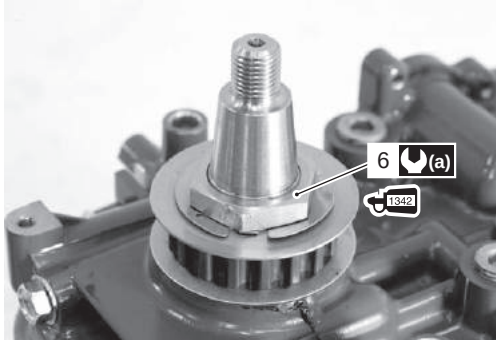

IDK111140154-01

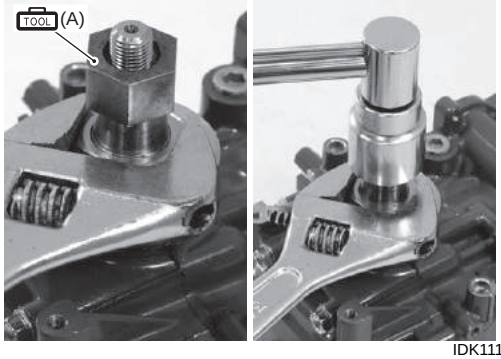

IDK111140155-01

7) Bend the lock washer edge (5) toward nut for locking.

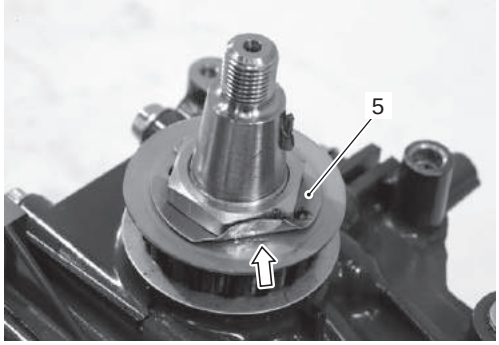

IDK111140156-01

Oil pressure regulator
Install oil pressure regulator (1) to cylinder, then tighten regulator securely.

Tightening torque
Oil pressure regulator (a): 27 N·m (2.7 kgf-m, 19.5 lbf-ft)

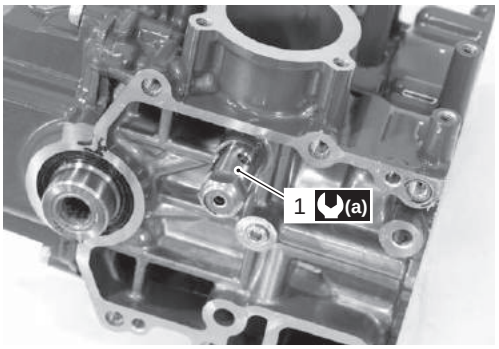

IDK111140157-01

Engine oil filter
Install the engine oil filter (1) and oil filter cap (2). Refer to “Engine Oil Change and Engine Oil Filter Replacement” in Section 0B (Page 0B-3).

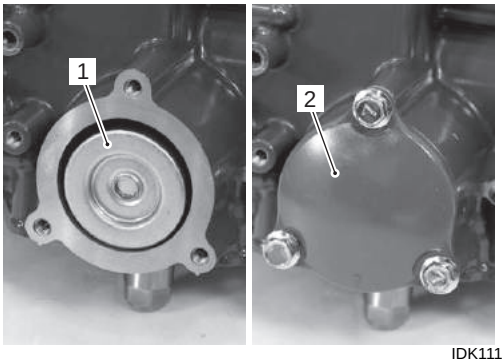

IDK111140158-01

Thermostat
Install the thermostat (1) and thermostat cover (2). Refer to “Thermostat Removal and Installation” in Section 1F (Page 1F-3).

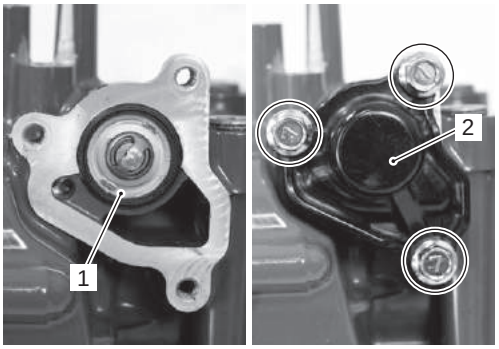

IDK111140159-01

Cylinder head
Refer to “Cylinder Head Removal and Installation” (Page 1D-20).

Power unit
Refer to “Power Unit Removal and Installation” (Page 1D-8).

Cylinder, Piston and Piston Ring Inspection and Servicing

CENDK1111406016

NOTE

If cracks, excessive wear or other damage is found on any component, replace component.

Cylinder Distortion
Using a straightedge and thickness gauge, measure cylinder distortion (gasket surface) at a total of six locations as shown.
If measurement exceeds service limit, resurface or replace cylinder.

Special tool
TOOL (A): 09900–20803 (Thickness gauge)

Cylinder distortion
Service limit: 0.06 mm (0.002 in.)

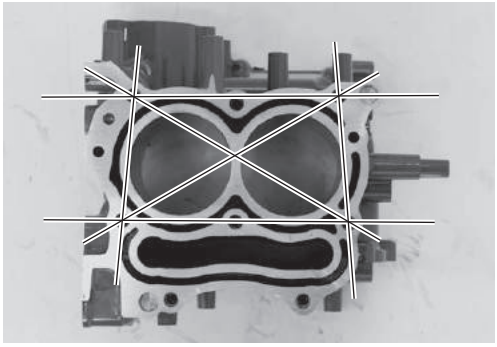
IDK111140160-01

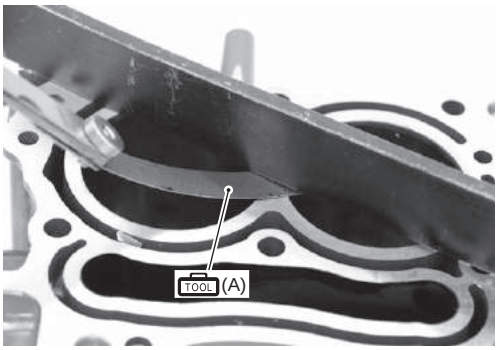

IDK111140161-01

NOTE

The cylinder can be resurfaced, using a surface plate and #400 grit wet sandpaper. Move the cylinder in a figure eight pattern when sanding.

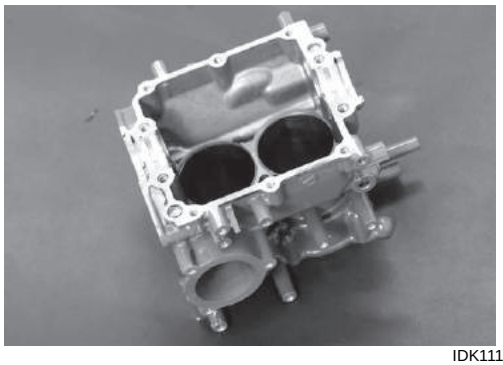

IDK111140162-01

Water Jackets

Check water jackets.

If clogged or obstruction is found, clean water jacket.

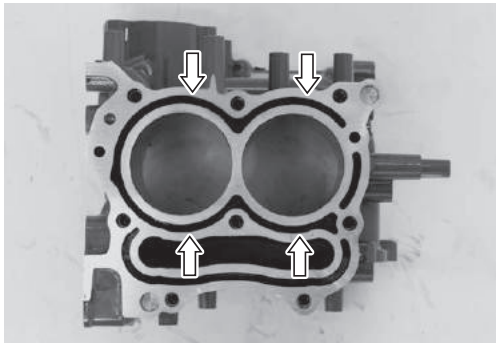

IDK111140172-01

Cylinder Bore

Inspect cylinder walls for scratches, roughness, or ridges which indicate excessive wear.

If cylinder bore is very rough, deeply scratched or ridged, bore cylinder and use oversize piston.

Cylinder Bore Wear (Difference)

Using telescoping gauge (1), measure cylinder bore in both axial (vertical line, following crankshaft) and transverse (horizontal line across crankshaft) directions at two positions as shown in figure.

NOTE

Purchase a commercially available telescoping gauge for this measurement.

Check the following:

- Difference between measurements at the two positions (taper).
- Difference between axial and transverse measurement (out-of-round).

If measurement exceeds service limit, bore or replace cylinder.

Cylinder bore wear (difference)
Service limit: 0.10 mm (0.0039 in.)

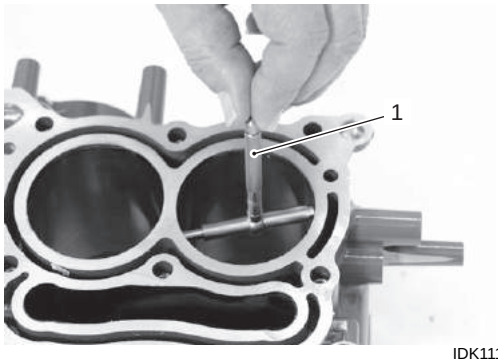

IDK111140163-02

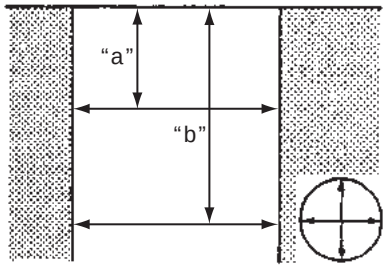

I9J011140060-01

Piston to Cylinder Clearance

1) Measure the piston diameter at a point 9 mm (0.354 in.) above the piston skirt at a right angle to the piston pin bore.

Special tool
TOOL (A): 09900–20203 (Micrometer (50 – 75 mm))

Piston skirt diameter
Standard: 60.365 – 60.380 mm (2.3766 – 2.3772 in.)

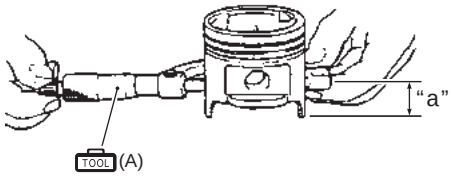

I9J011140061-02

"a": 9 mm

2) Measure the cylinder bore at 50 mm (1.969 in.) below the cylinder head gasket surface at a right angle to the crankshaft pin.

NOTE

Purchase a commercially available telescoping gauge (1) for this measurement.

Cylinder bore diameter
Standard: 60.400 – 60.415 mm (2.3780 – 2.3785 in.)

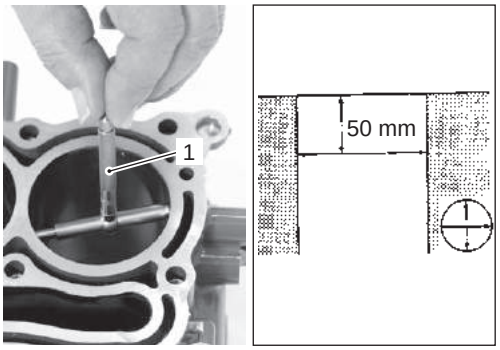

IDK111140164-01

3) Calculate the piston / cylinder clearance (Clearance equals difference between piston diameter and cylinder bore measurements).
If clearance exceeds service limit, replace piston and/or cylinder or bore cylinder.

Piston to cylinder clearance
Standard: 0.0271 – 0.0425 mm (0.0011 – 0.0017 in.)
Service limit: 0.100 mm (0.0039 in.)

Identification of Oversize Piston / Piston Ring
One oversize piston / piston ring components, 0.50 mm is available. Oversize piston / piston ring are marked as shown, below.

Piston

Oversize	I.D. mark
0.50 mm	50

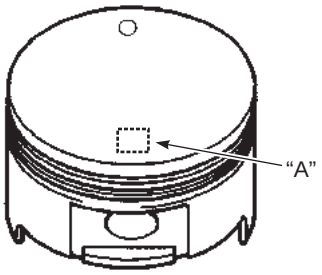

IDK111140012-01

"A": I.D. mark: 50

1st and 2nd piston ring

Oversize	I.D. mark
0.50 mm	50

1st, 2nd ring

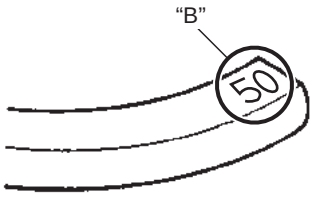

I9J011140063-03

"B": I.D. mark

Oil ring

Oversize	I.D. mark
0.50 mm	One red paint

Oil ring spacer

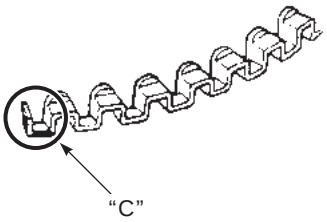

I9J011140064-02

"C": I.D. mark

Piston
Visual inspection
Inspect piston for faults, cracks or other damage.
Damaged or faulty piston(s) should be replaced.

Piston ring to groove clearance
Before checking, piston grooves must be clean, dry and free of carbon.
Fit piston ring into piston groove, and measure clearance between ring and ring groove using thickness gauge.
If measurement exceeds service limit, replace piston and/or piston ring.

Special tool
TOOL (A): 09900–20803 (Thickness gauge)

Piston ring to groove clearance
Standard (1st): 0.030 – 0.070 mm (0.0012 – 0.0028 in.)
Standard (2nd): 0.020 – 0.060 mm (0.0008 – 0.0024 in.)
Service limit (1st): 0.12 mm (0.005 in.)
Service limit (2nd): 0.10 mm (0.004 in.)

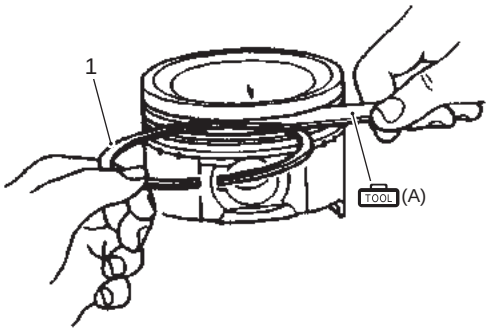

I9J011140065-03

1. Piston ring	

Piston ring groove width
Standard (1st): 1.02 – 1.04 mm (0.040 – 0.041 in.)
Standard (2nd): 1.21 – 1.23 mm (0.048 – 0.048 in.)
Standard (Oil): 2.01 – 2.03 mm (0.079 – 0.080 in.)

Piston ring thickness
Standard (1st): 0.97 – 0.99 mm (0.038 – 0.039 in.)
Standard (2nd): 1.17 – 1.19 mm (0.046 – 0.047 in.)

Piston Ring
Piston ring end gap
Measure piston ring end gap with piston ring in the lowest position of cylinder bore.
If measurement exceeds service limit, replace piston ring.

Special tool
TOOL (A): 09900–20803 (Thickness gauge)

Piston ring end gap
Standard (1st): 0.12 – 0.25 mm (0.0047 – 0.0098 in.)
Standard (2nd): 0.26 – 0.39 mm (0.0102 – 0.0154 in.)
Service limit (1st): 0.70 mm (0.028 in.)
Service limit (2nd): 0.70 mm (0.028 in.)

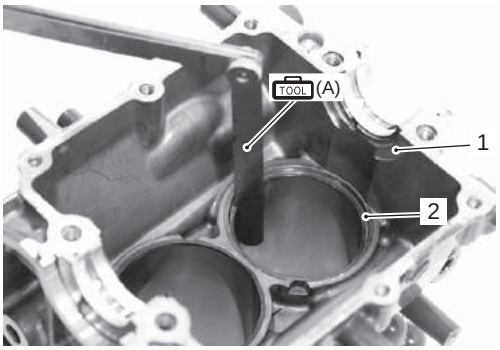

IDK111140165-01

1. Cylinder	2. Piston ring

Piston ring free end gap
Measure piston ring free end gap using vernier calipers.
If measurement exceeds service limit, replace piston ring.

Special tool
TOOL (A): 09900–20101 (Vernier calipers (150 mm))

Piston ring free end gap
Standard (1st): Approx. 6.3 mm (0.2480 in.)
Standard (2nd): Approx. 5.6 mm (0.2205 in.)
Service limit (1st): 5.0 mm (0.1969 in.)
Service limit (2nd): 4.5 mm (0.1772 in.)

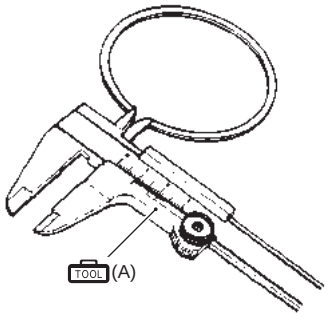

I9J011140067-02

Piston Pin and Conrod Inspection

CENDK1111406017

Piston Pin
Visual inspection

- Check piston pin, conrod small end bore and piston pin hole for wear or damage.
  If badly worn or damaged, replace component.
- Apply engine oil on piston pin so that the piston pin can move smoothly in the piston pin hole.
  If improper condition is found, replace the piston pin and/or piston.

Piston pin clearance
Check the piston pin clearance in the conrod small end.
Replace the conrod if its small end is badly worn or damaged or if clearance exceeds service limit.
Measure the following item:

Special tool
TOOL (A): 09900–20205 (Micrometer (0 – 25 mm))
TOOL (B): 09900–20605 (Dial calipers (10 – 34 mm))

Piston pin outside diameter
Standard: 15.995 – 16.000 mm (0.6297 – 0.6299 in.)
Service limit: 15.980 (0.6291 in.)

Piston pin hole diameter
Standard: 16.002 – 16.008 mm (0.6300 – 0.6302 in.)
Service limit: 16.030 (0.6311 in.)

Conrod small end bore
Standard: 16.006 – 16.014 mm (0.6302 – 0.6304 in.)

Pin clearance in piston pin hole
Standard: 0.002 – 0.013 mm (0.0001 – 0.0005 in.)
Service limit: 0.05 (0.0020 in.)

Pin clearance in conrod small end
Standard: 0.006 – 0.019 mm (0.0002 – 0.0007 in.)
Service limit: 0.05 (0.0020 in.)

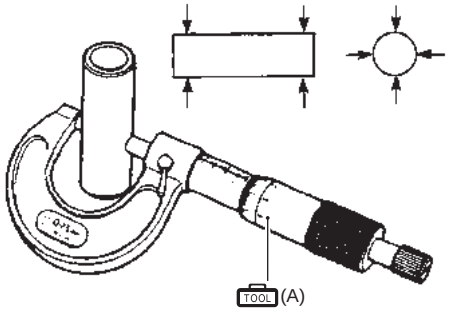

I9J011140068-02

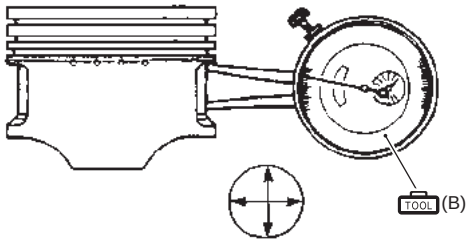

I9J011140069-02

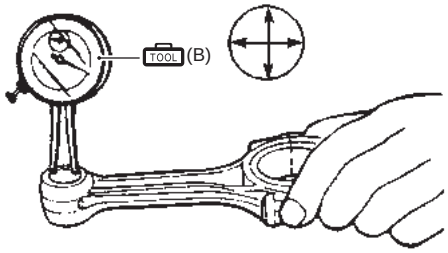

I9J011140070-02

Crank Pin and Conrod Inspection

CENDK1111406018

Conrod Big End Side Clearance

Measure conrod big end side clearance with conrod installed on crank pin as shown.
If measurement exceeds service limit, replace conrod and/or crankshaft.

Special tool
TOOL (A): 09900–20803 (Thickness gauge)

Conrod big end side clearance
Standard: 0.100 – 0.250 mm (0.0039 – 0.0098 in.)
Service limit: 0.350 mm (0.0138 in.)

Conrod big end width
Standard: 19.950 – 20.000 mm (0.7854 – 0.7874 in.)

Crank pin width
Standard: 20.100 – 20.200 mm (0.7913 – 0.7953 in.)

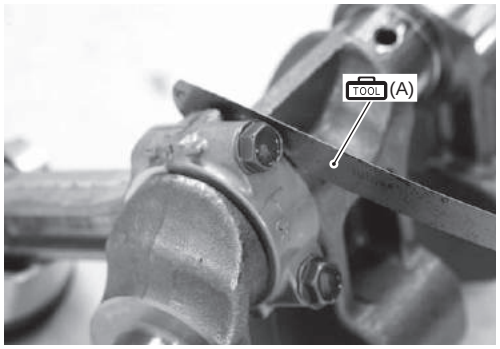

IDK111140166-01

Crank Pin Diameter

Inspect crank pin for uneven wear or damage.
Measure crank pin for out-of-round “a” – “b” or taper “c” – “d” with micrometer.
If crank pin is damaged, out-of-round “a” – “b” or taper “c” – “d” is out of service limit, replace crankshaft.

Special tool
TOOL (A): 09900–20202 (Micrometer (25 – 50 mm))

Crank pin diameter
Standard: 28.989 – 29.000 mm (1.1413 – 1.1417 in.)

Out-of-round and taper
Service limit: 0.01 mm (0.0004 in.)

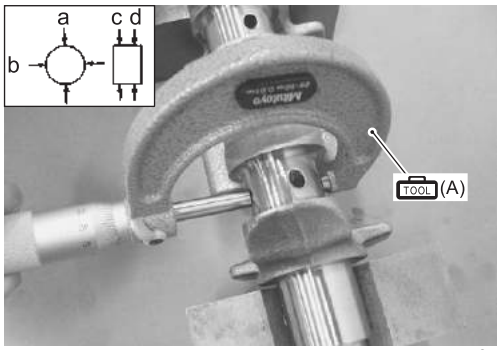

IAJ311140009-03

Conrod Big End Inside Diameter

Measure the conrod big end inside diameter as follows.

1) Clean the surface of the conrod and the conrod cap.
2) Install the conrod cap to the conrod.
3) Apply the engine oil to the conrod bolts and tighten the bolts to the specified torque.

Tightening torque
Conrod cap bolt (a): 10 N·m (1.0 kgf-m, 7.2 lbf-ft)

IAJ311140010-01

4) Measure the conrod big end inside diameter.

Special tool
TOOL : 09900–20605 (Dial calipers (10 – 34 mm))

Conrod big end inside diameter
Standard: 29.025 – 29.034 mm (1.1427 – 1.1431 in)

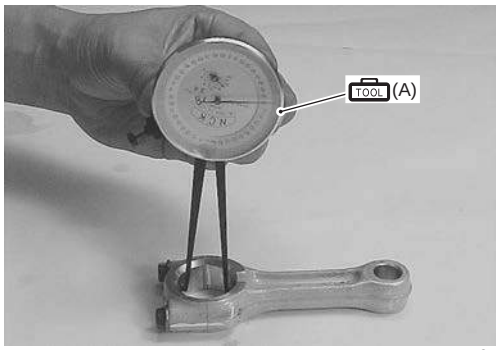

IAJ311140011-01

Crank Pin / Conrod Big End Oil Clearance

Check conrod big end oil clearance as follows:

1) Clean surface of conrod, conrod cap and crank pin.
2) Place a piece of Plastigauge on crank pin parallel to crankshaft. Avoid placing Plastigauge over oil hole.

Special tool
TOOL (A): 09900–22301 (Plastigauge (0.025 – 0.076 mm))

IAJ311140157-01

3) Install conrod and conrod cap to crank pin.
4) Apply engine oil to conrod cap bolts, then tighten conrod cap bolts in two steps.

Tightening torque
Conrod cap bolt [1st step] (a): 5 N·m (0.5 kgf-m, 3.5 lbf-ft)
Conrod cap bolt [Final step] (a): 10 N·m (1.0 kgf-m, 7.2 lbf-ft)

IAJ311140158-01

NOTE

Do not rotate conrod with Plastigauge in place.

5) Remove conrod and conrod cap from crank pin.
6) Using scale on plastigauge envelope, measure plastigauge width at its widest point.
   If measurement exceeds service limit, replace the conrod assembly and/or crankshaft.

   Conrod big end oil clearance
   Standard: 0.025 – 0.045 mm (0.0010 – 0.0018 in.)
   Service limit: 0.080 mm (0.0031 in.)

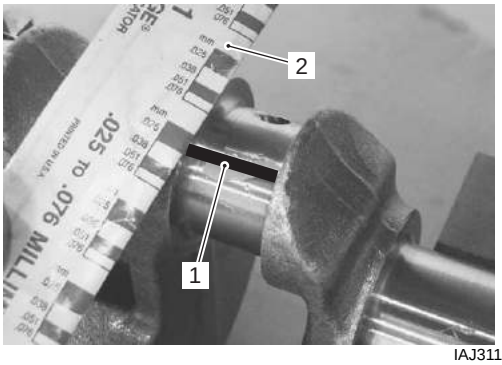

IAJ311140159-02

1. Plastigauge	2. Scale

Crankshaft Inspection

CENDK1111406019

Crankshaft Runout

Using a dial gauge, measure runout at journal.
If measurement exceeds service limit, replace crankshaft.

Special tool
TOOL (A): 09900–20606 (Dial gauge)

Crankshaft runout
Service limit: 0.04 mm (0.0016 in.)

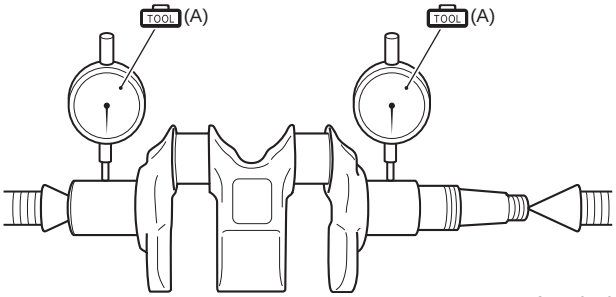

IAJ311140176-01

Crankshaft Thrust Play

Measure the crankshaft thrust play.

Special tool
TOOL (A): 09900–20803 (Thickness gauge)

Crankshaft thrust play
Service limit: 0.6 mm (0.024 in.)

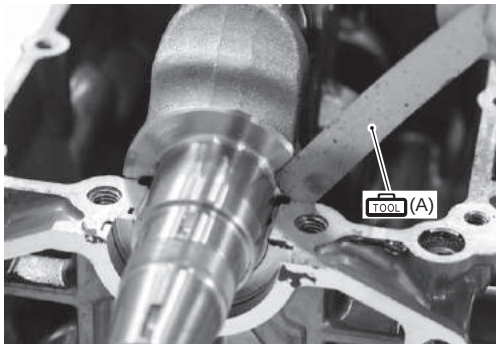

IDK111140167-01

If measurement exceeds service limit, replace crankshaft and/or crankcase.

Crankshaft length “a”
Standard: 126.8 – 126.9 (4.992 – 4.996 in.)

Crankcase length “b”
Standard: 127.0 – 127.1 (5.000 – 5.004 in.)

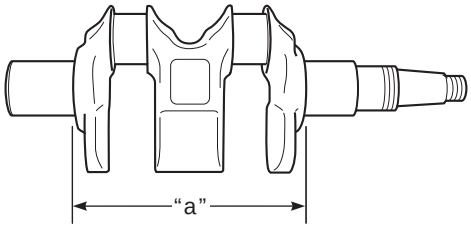

IAJ311140177-01

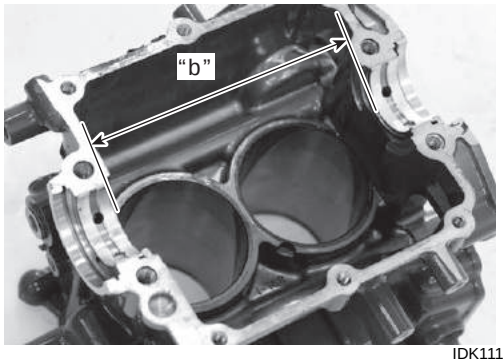

IDK111140168-01

Out-of-Round and Taper (Uneven Wear) of Journals
An unevenly worn crankshaft journal shows up as a difference in diameter at a cross section or along its length (or both).
This difference, if any, is determined by taking micrometer readings.
If any journal is badly damaged or if measurements exceed service limit, replace crankshaft.

Special tool
TOOL (A): 09900–20202 (Micrometer (25 – 50 mm))

Out-of-round and taper
Service limit: 0.01 mm (0.0004 in.)

Out-of-round: A – B
Taper: a – b

Crankshaft journal outside diameter
Standard: 31.989 – 32.000 mm (1.2594 – 1.2598 in.)

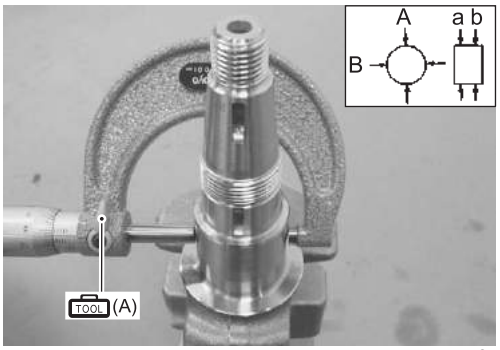

IAJ311140012-03

Crankshaft Main Bearing Inspection

CENDK1111406020

Crankshaft Main Bearing Visual Inspection
Check bearings for pitting, scratches, wear or damage.
If any improper condition is found, replace both upper and lower halves.
Always replace both bearing halves, never replace only one half of a bearing set.

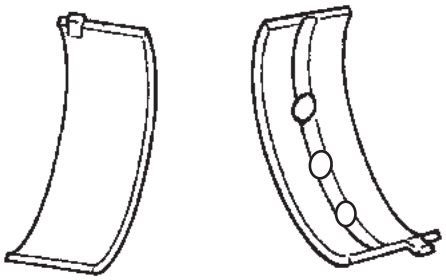
I9J011140073-01

Crankshaft Journal Oil Clearance
Check clearance using Plastigauge according to the following procedure.

NOTE

Assemble each bearing in its original position before checking clearance.

1) Clean surface of bearing holder (crankcase, and cylinder), bearing, and main bearing journal.
2) Install main bearing (1) to cylinder and crankcase.

NOTE

- **Align tab "A" of bearing with notch in cylinder and crankcase.**
- **Do not apply engine oil to bearing.**

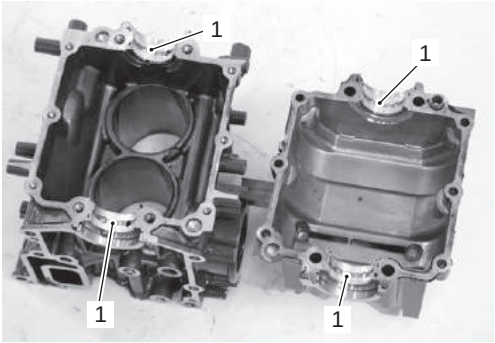

IDK111140169-01

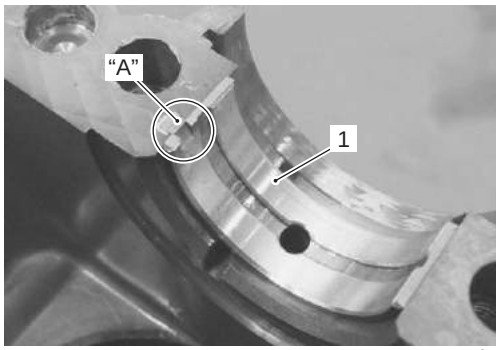

IAJ311140163-01

3) Install crankshaft to cylinder.
4) Place a piece of Plastigauge across full width of bearing (parallel to crankshaft) on journal.
   Do not place Plastigauge over oil hole.

   Special tool
   TOOL (A): 09900–22301 (Plastigauge (0.025 – 0.076 mm))

   NOTE

   Do not rotate crankshaft while Plastigauge is installed.

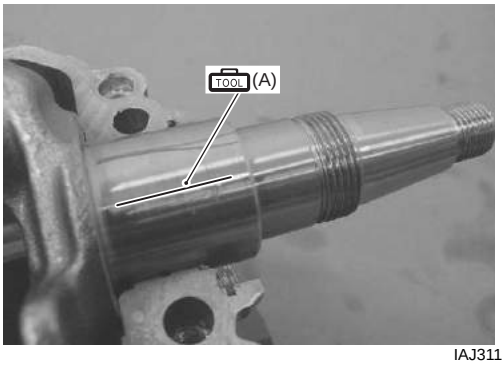

IAJ311140164-01

5) Assemble crankcase to cylinder.
6) Apply engine oil lightly to 8 mm (0.31 in.) crankcase inside bolts only.

   NOTE

   Do not apply oil to 6 mm (0.23 in.) crankcase outside bolts.

7) Tighten crankcase bolts in two steps following the order indicated below.

   Tightening torque
   Crankcase inside bolt (8 mm thread diameter)
   [1st step]: 13 N·m (1.3 kgf-m, 9.3 lbf-ft)
   Crankcase outside bolt (6 mm thread diameter)
   [1st step]: 5 N·m (0.5 kgf-m, 3.6 lbf-ft)
   Crankcase inside bolt (8 mm thread diameter)
   [Final step]: 25 N·m (2.5 kgf-m, 18.0 lbf-ft)
   Crankcase outside bolt (6 mm thread diameter)
   [Final step]: 10 N·m (1.0 kgf-m, 7.2 lbf-ft)

   NOTE

   Crankcase must be torqued to specification in order to assure proper compression of plastigauge and accurate reading of clearance.

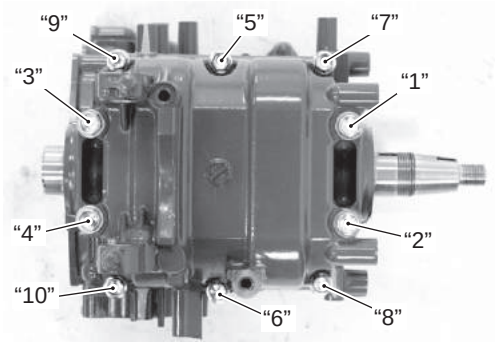

IDK111140170-01

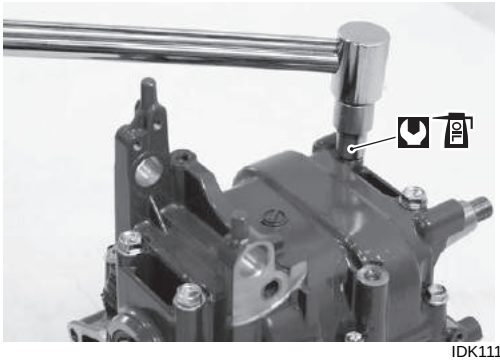

IDK111140171-01

8) Remove crankcase from cylinder.
9) Using scale on Plastigauge envelope, measure plastigauge width at its widest point.

   <u>Crankshaft journal oil clearance</u>
   Standard: 0.020 – 0.047 mm (0.0008 – 0.0019 in.)
   Service limit: 0.080 mm (0.0031 in.)

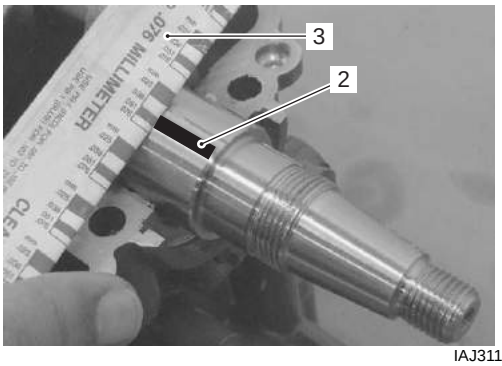

IAJ311140167-02

2. Plastigauge	3. Scale

10) If measurement exceeds service limit, replace crankshaft main bearing.

Crankshaft Oil Seal Inspection

CENDK1111406021

Inspect condition. If cracked, cut or damaged, replace.

IAJ311140168-01

Power Unit Lubrication

General Description

Engine Lubrication Description

CENDK1111501001

A camshaft driven trochoid type pump provides engine oil to all power unit components requiring lubrication.
Oil from the oil pan is drawn through the oil hose and passed through a oil filter before entering the main oil gallery.
A pressure regulator (relief valve) is positioned between the oil pump and main gallery to maintain oil pressure at a constant level.
From the main gallery, oil flow is directed through either drilled internal passages or by splash method to those surfaces requiring lubrication.

Schematic and Routing Diagram

Engine Oil Lubrication Chart

CENDK1111502001

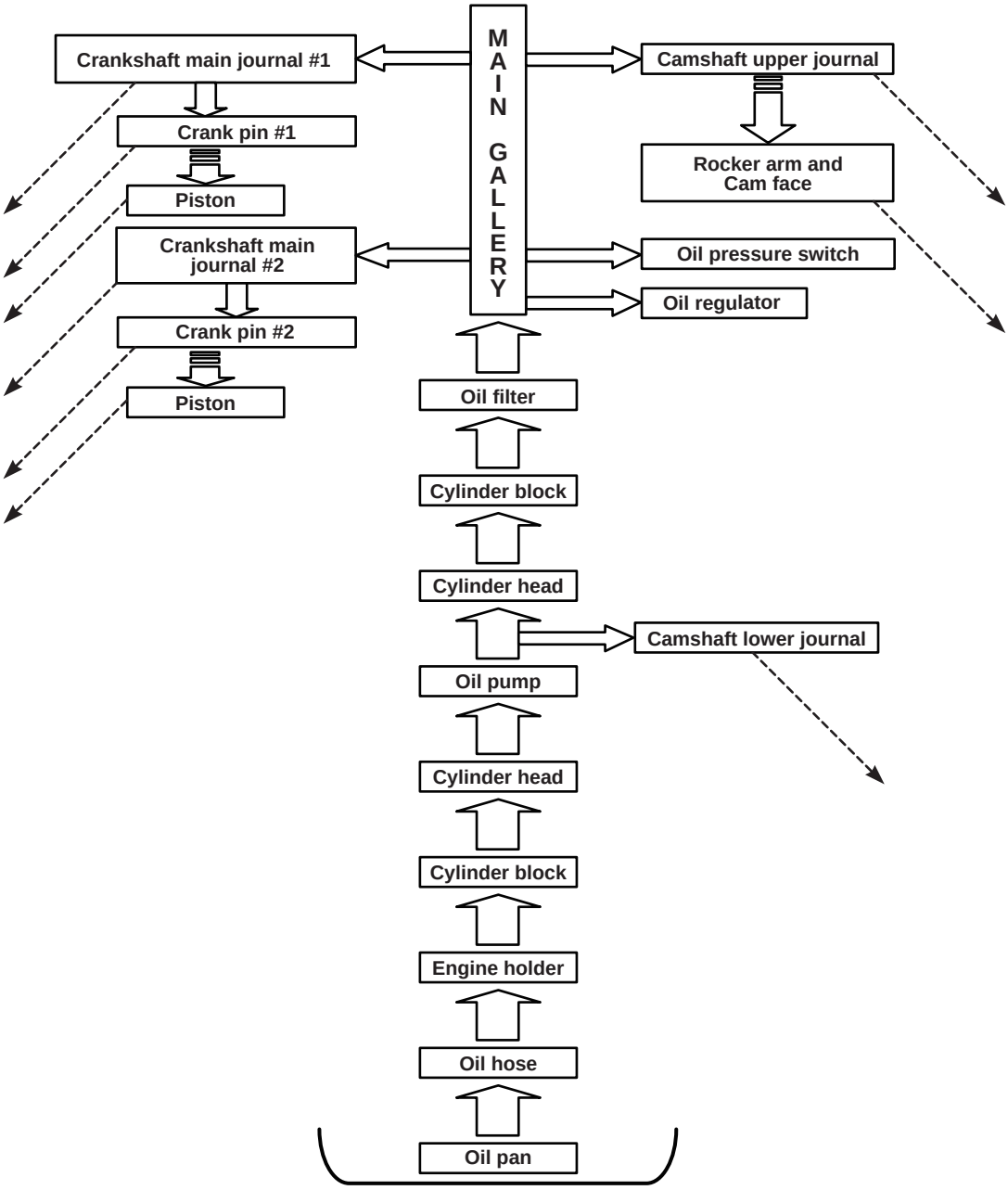

IDK111150018-05

Diagnostic Information and Procedures

Oil Pressure Check

CENDK1111504001

Refer to “Oil Pressure Check” in Section 0B (Page 0B-21).

Low Oil Pressure Caution System

CENDK1111504002

Refer to “Caution System Description” in Section 1A (Page 1A-9).

Powerhead Lubrication System Diagnosis

CENDK1111504003

Condition	Possible cause	Correction / Reference item
Low oil pressure	Clogged oil filter.	*Replace.*
	Leakage from oil passages.	*Repair or replace.*
	Defective oil pump.	*Replace.*
	Defective oil pressure regulator.	*Replace.*
	Damaged O-ring.	*Replace.*
	Combination of above item.	*Repair or replace.*
High oil pressure	Using an engine oil of too high viscosity.	*Replace.*
	Clogged oil passage.	*Clean or replace.*
	Clogged oil pressure regulator.	*Replace.*
	Combination of above items.	*Repair or replace*

Service Instructions

Oil Pump Removal and Installation

CENDK1111506001

Removal

1) Remove the power unit.
   Refer to “Power Unit Removal and Installation” in Section 1D (Page 1D-8).
2) Remove the three screws (1) securing oil pump, then remove the oil pump and oil gallery block (2).

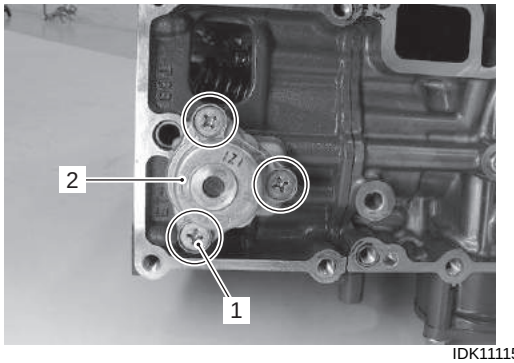

IDK111150016-02

3) Turn the oil pump shaft (4) until the pin (3) comes out through hole of oil gallery block (2).
   Remove the oil gallery block.

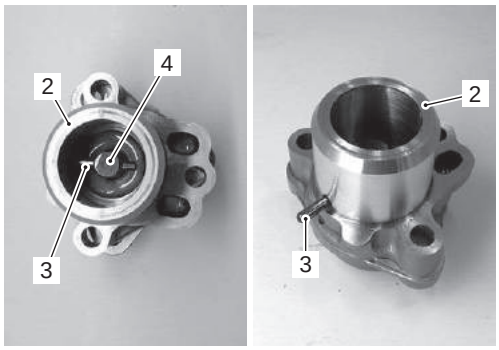

IDK111150001-02

Installation

Installation is reverse order of removal with special attention to the following steps.

- Pour approx. 10 ml (0.4 oz.) of engine oil into pump case for initial lubrication.
- Apply engine oil to surface of camshaft lower journals.
- Install oil gallery block and oil pump assembly by aligning the pin (A) on the oil pump shaft with the recess (B) on the camshaft.

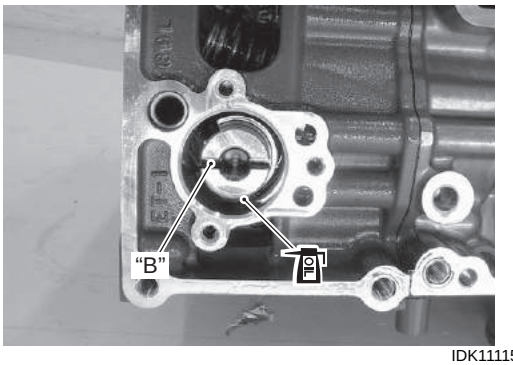

IDK111150002-02

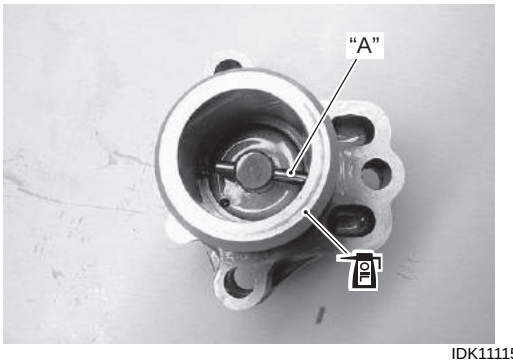

IDK111150003-02

- Apply thread lock 1342 to oil pump screw (1) before threading.
- Tighten the oil pump screws (1) securely.

Tightening torque
Oil Pump (a): 8.5 N·m (0.9 kgf-m, 6.5 lbf-ft)

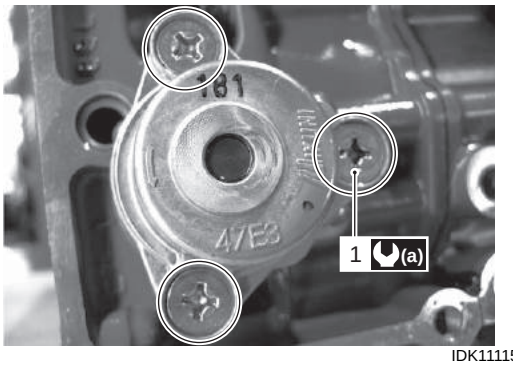

IDK111150004-01

Oil Pump Disassembly and Assembly

CENDK1111506002

Disassembly

1) Remove the screw (1) securing oil pump rotor plate (2) to the oil pump case, then remove oil pump rotor plate.

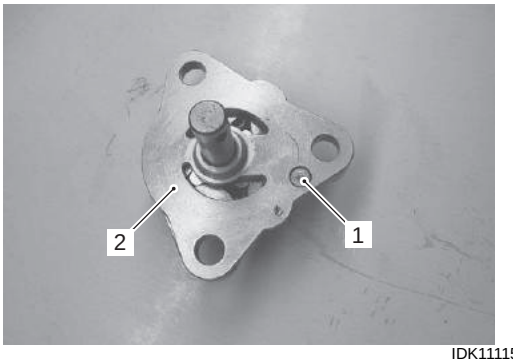

IDK111150005-02

2) Remove the shaft (3) and pin (4).

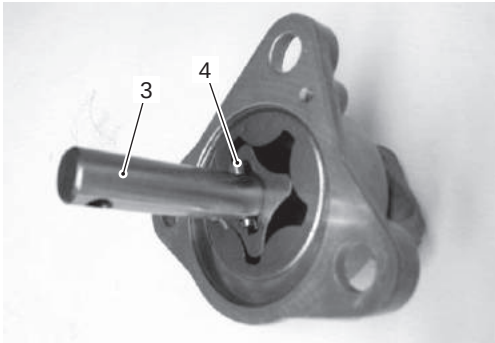

IDK111150007-02

3) Take out inner rotor (5) and outer rotor (6).

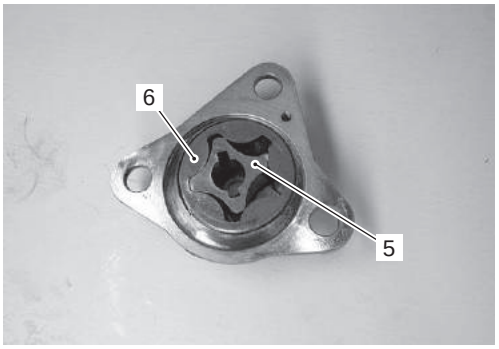

IDK111150006-02

Assembly

1) Wash, clean and then dry all disassembly parts.
2) Apply thin coat of engine oil to inner and outer rotors, inside surfaces of oil pump case and plate.
3) Install outer rotor (1) and inner rotor (2) to pump case.

NOTE

When installing outer rotor, it must be original in direction of up and down.

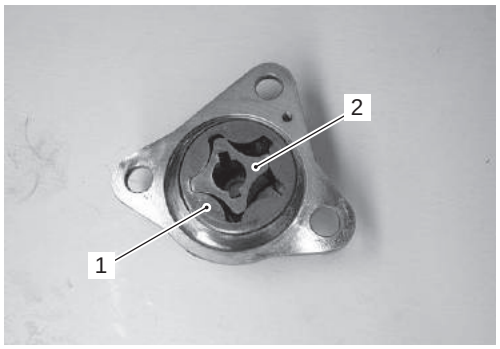

IDK111150009-03

4) Assemble the pin (3) to oil pump shaft (4), then install oil pump shaft.

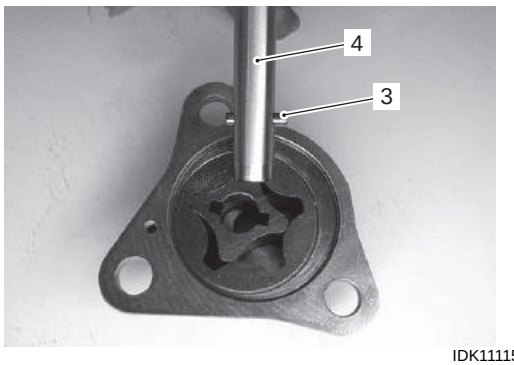

IDK111150019-02

5) Install the rotor plate (5), and then tighten screw (6) securely.
   After mounting the rotor plate, make sure that each rotor turns smoothly by hand.

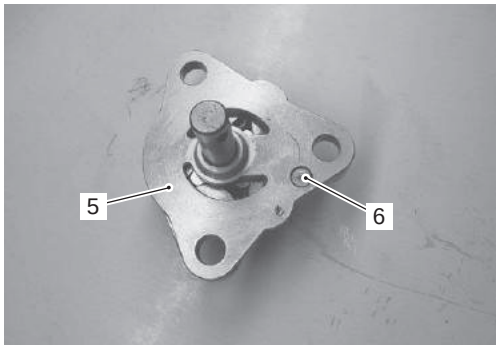

IDK111150010-02

6) Pour approx. 10 ml (0.4 oz.) of engine oil into pump case for initial lubrication.

Inspection Oil Pump Component Parts

CENDK1111506003

NOTE

If any repair is required on outer rotor, inner rotor and oil pump case / plate, replace them as an oil pump assembly.

Oil Pump Component Parts

Check outer and inner rotors, rotor plate and oil pump case for excessive wear or damage. Replace as necessary.

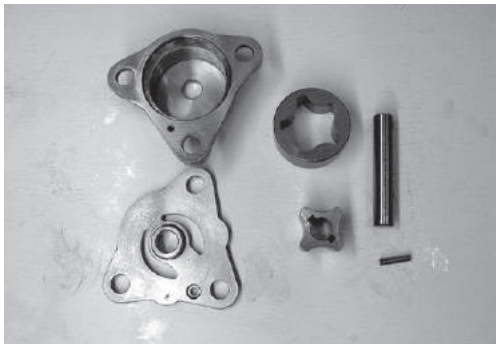

IDK111150012-02

Measuring Radial Clearance

Using a feeler gauge, measure radial clearance between outer rotor and case.
If measurement is not within specifications, replace oil pump assembly.

Radial clearance
Service limit: 0.31 mm (0.0122 in.)

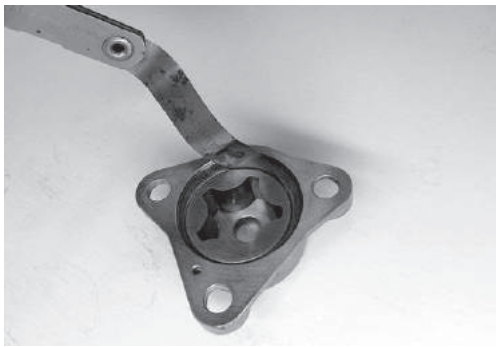

IDK111150023-01

Oil Pressure Switch Removal and Installation

CENDK1111506004

Removal

1) Remove the SDS service connector (1) from electric part holder.
2) Remove the fuel filter (2) from filter bracket.

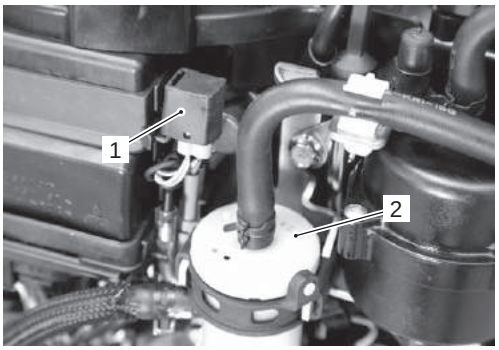

IDK111150020-02

3) Loosen screw (3) and disconnect blue/yellow lead wire (4) from oil pressure switch (5).

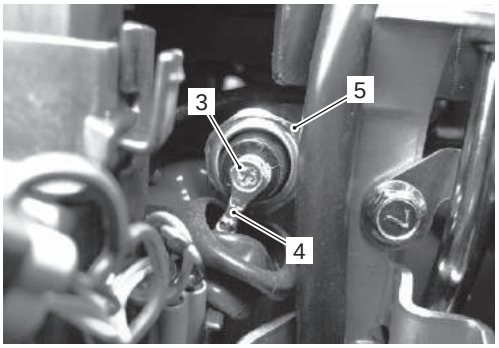

IDK111150017-02

4) Remove oil pressure switch from cylinder block.

Installation

Installation is reverse order of removal with special attention to the following steps.

- Before installing oil pressure switch, wrap screw threads with sealing tape (1), then tighten switch to specified torque.

NOTE

Cut off any excess sealing tape from switch threads before installation.

Tightening torque
Oil pressure switch (a): 13 N·m (1.3 kgf-m, 9.5 lbf-ft)

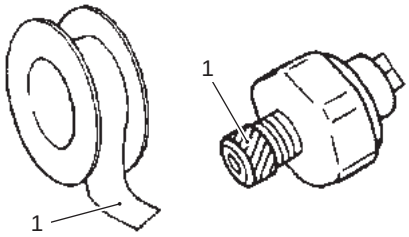

I9J011150002-01

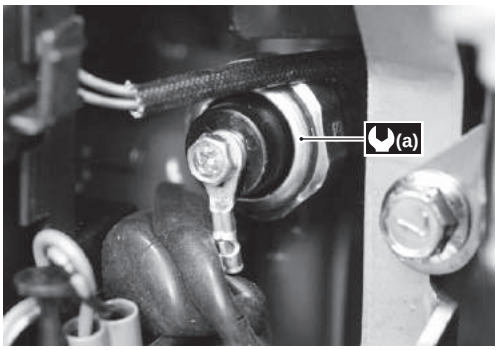

IDK111150014-02

- Start engine and check oil pressure switch for oil leakage.
  Reseal switch if oil leakage is found.
- Cover the oil pressure switch with the cap (2).

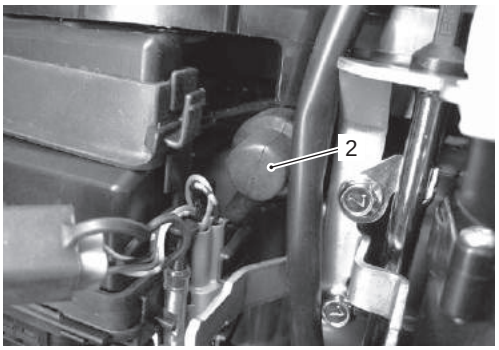

IDK111150021-01

- Check to ensure that all removed parts are back in place.

Oil Pressure Switch Inspection

CENDK1111506005

NOTE

Before checking the oil pressure switch, make sure the engine oil pressure is within specification.

1) Temporarily remove the SDS service connector (1) from electric part holder.
2) Temporarily remove the fuel filter (2) from filter bracket.

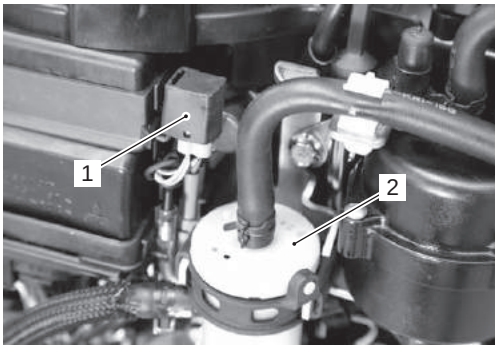

IDK111150022-02

3) Remove the blue/yellow lead wire (3) from oil pressure switch (4).

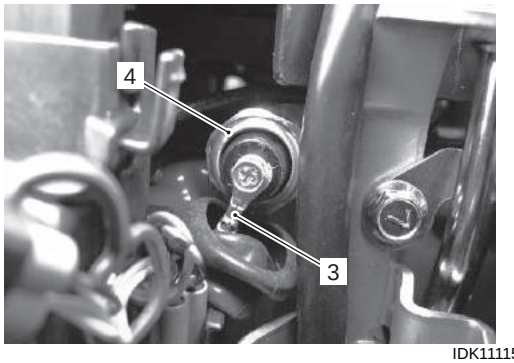

IDK111150015-01

4) Install the fuel filter to filter bracket.
5) Check the continuity between the switch terminal and engine body ground.

Special tool
TOOL : 09930–99320 (Digital tester)

Tester knob indication
Continuity (•))))

Oil pressure switch continuity
Engine running: Infinity
Engine stopped: Continuity

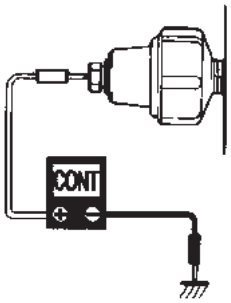

I9J011150003-01

6) If measurement exceeds specification, replace oil pressure switch.
7) After testing oil pressure switch, reinstall parts removed earlier.

Power Unit Cooling System

General Description

Water Cooling System Description

CENDK1111601001

The cooling system uses a displacement type flexible vane impeller to supply cooling water to the powerhead assembly.
To prevent incomplete combustion due to an overcooled engine, and to ensure proper water flow during cold engine operation, there is a thermostat in the cylinder block.
Motor temperature and cooling system efficiency are monitored by cylinder temp. sensor in the cylinder. If temperature higher than normal is detected by a sensor, an advance caution of overheat condition is provided.

Displacement Type Water Pump Description

CENDK1111601002

In this displacement type water pump, the water pressure is increased by the change in volume between the impeller and the pump case. As a result, the increased water pressure enables the water pump to circulate the cooling water.

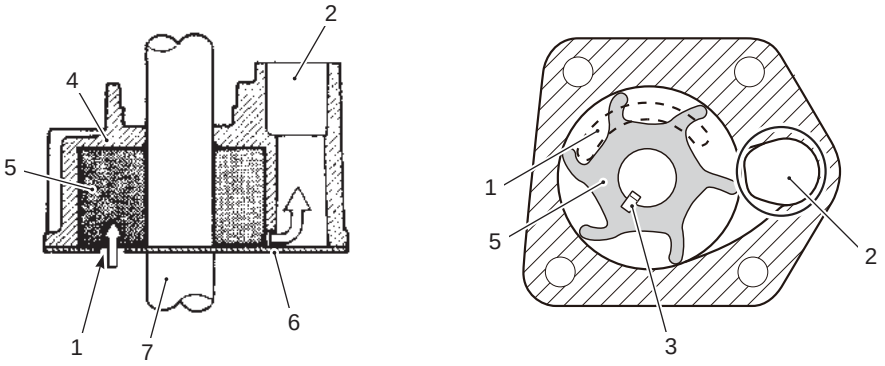

IAJ311160002-01

1. Water inlet	3. Key	5. Water pump impeller	7. Driveshaft
2. Water outlet	4. Water pump case	6. Under panel	

Schematic and Routing Diagram

Cooling Water Circulation Chart

CENDK1111602001

The water cooling system includes the lower unit water pump, lower unit to power unit water supply tube, power unit water passages and thermostat.
This system cools both the power unit and exhaust and is shown in schematic form below.
If overheating occurs, the components of the cooling system must be inspected for blockage, corrosion build-up or component damage.

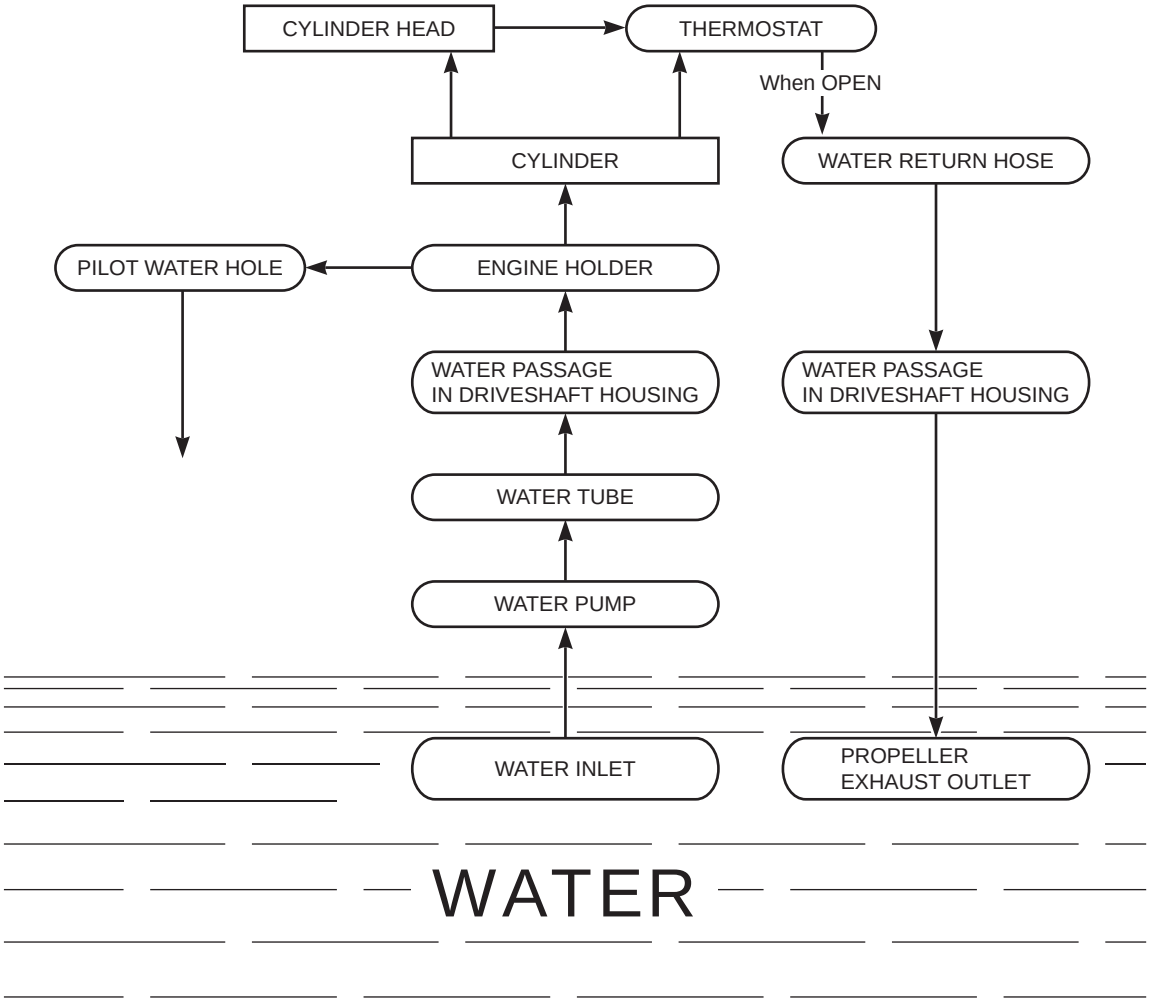

IAJ311160001-02

Diagnostic Information and Procedures

Powerhead Cooling System Diagnosis

CENDK1111604001

Condition	Possible cause	Correction / Reference item
Overheating powerhead	Water inlet screen obstructed.	*Clean.*
	Water passage obstructed.	*Clean or replace.*
	Pump plate not sealing.	*Check and repair.*
	Water pump impeller damage.	*Replace.*
	Water pump housing and/or plate worn.	*Replace.*
	Water pump housing seal worn.	*Replace.*
	Water tube grommet damaged.	*Replace.*
	Thermostat damaged / defective.	*Replace.*
	Water tube obstructed.	*Clean.*
	Water tube defective.	*Replace.*
Overcooling powerhead	Thermostat damaged / defective.	*Replace.*

Service Instructions

Thermostat Removal and Installation

CENDK1111606001

Removal

1) Remove the recoil starter.
   Refer to “Recoil Starter Removal and Installation” in Section 1J (Page 1J-3).
2) Disconnect the breather hose (1) from silencer case. Remove the bolt (2) and silencer case (3).

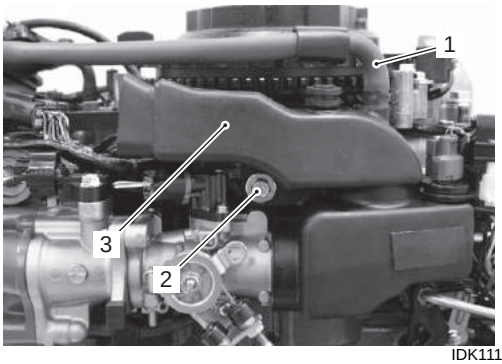

IDK111160006-02

3) Disconnect IAC valve lead wire connector (4) at IAC valve.
   Disconnect MAP sensor lead wire connector (5) at sensor.
   Remove the bolt (6) securing anode cover.

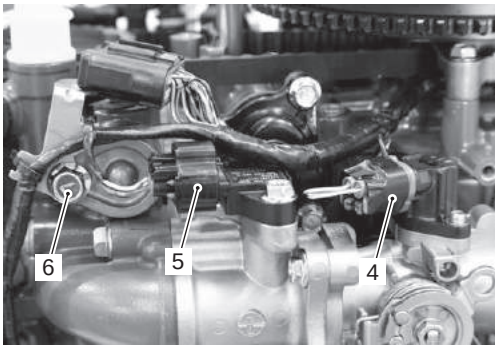

IDK111160007-02

4) Remove the three bolts (7) securing the thermostat cover (8), then remove the cover and thermostat (9).

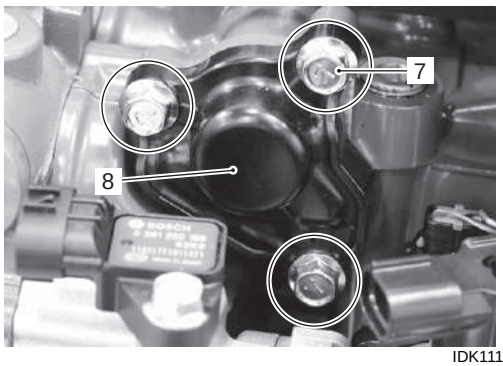

IDK111160001-02

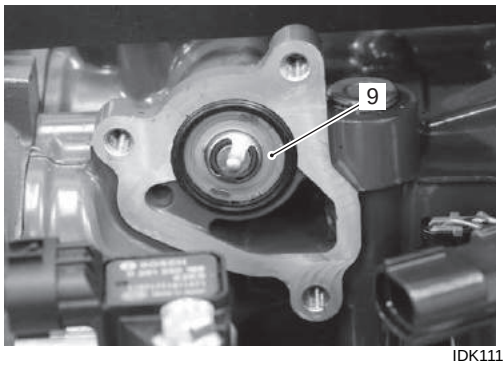

IDK111160002-02

Installation

Installation is reverse order of removal with special attention to the following steps.

1) Install seal (1) to thermostat cover (2).

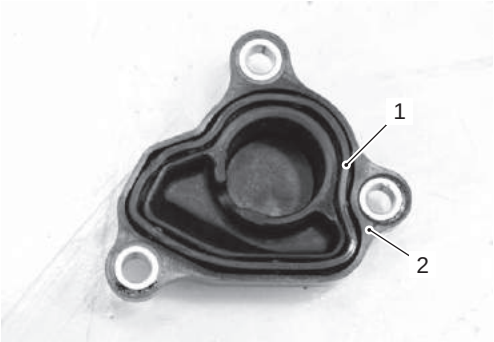

IDK111160003-02

2) Assemble thermostat (3) and thermostat cover (2) to cylinder block and secure with bolts (4).

Tightening torque
Thermostat cover bolt (a): 10 N·m (1.0 kgf-m, 7.2 lbf-ft)

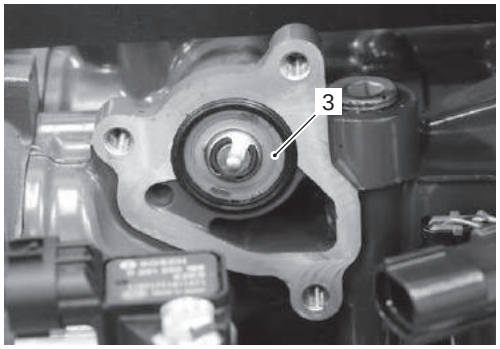

IDK111160004-02

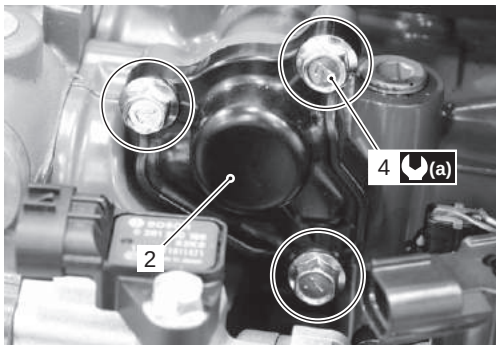

IDK111160005-02

3) Connect the lead wire connector to IAC valve. Connect the lead wire connector to MAP sensor. Securely tighten anode cover with bolt.

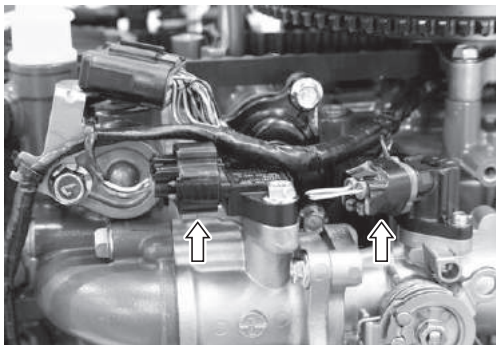

IDK111160008-02

4) Install the silencer case, then securely tighten it with bolt.
5) Install the recoil starter.
   Refer to “Recoil Starter Removal and Installation” in Section 1J (Page 1J-3).
6) Check to ensure that all removed parts are back in place.

Thermostat and Related Items Inspection

CENDK1111606002

Inspect the thermostat in the following procedures:

1) Remove the thermostat.
   Refer to “Thermostat Removal and Installation” (Page 1F-3).
2) Inspect the thermostat.
   If salt deposits, corrosion, wear or other damage is found, clean or replace.

IAJ311160008-01

3) Check thermostat opening temperature as follows:
   a) Insert a length of thread between thermostat valve / body and suspend thermostat in a container filled with water.
   b) Place thermometer in container and heat water. Observe water temperature when thermostat valve opens and releases thread.

      Thermostat operating temperature
      Standard: 48 – 52 °C (118 – 126 °F)

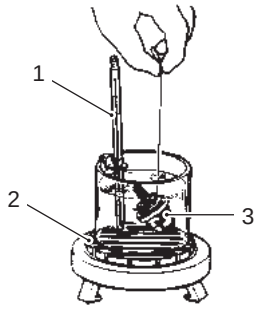

I9J011160002-01

1. Thermometer	3. Thermostat
2. Heater	

If thermostat valve does not open as specified above, or sticks in any position, replace it.

4) Inspect thermostat cover. Replace if cracked, distorted or other abnormal conditions are noted. Check condition of seal. Replace seal if nicked, cut, worn or other abnormal condition are noted.

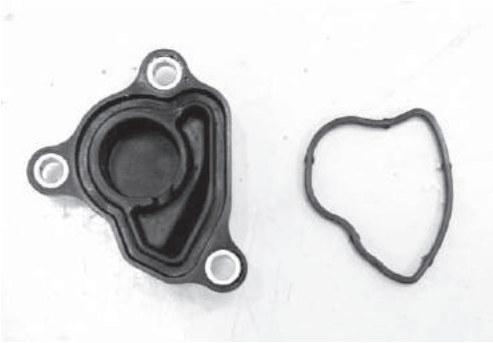

IDK111160009-02

5) Install the thermostat.
   Refer to “Thermostat Removal and Installation” (Page 1F-3).

Water Pump Removal and Installation

CENDK1111606003

Refer to “Water Pump Removal and Installation” in Section 3A (Page 3A-6).

Water Pump Related Item Inspection

CENDK1111606004

Refer to “Water Pump and Related Items Inspection” in Section 3A (Page 3A-8).

Water Tube Removal and Installation

CENDK1111606005

Removal

Refer to “Engine Holder / Driveshaft Housing / Mounts Disassembly” in Section 2A (Page 2A-14).

Installation

Refer to “Engine Holder / Driveshaft Housing / Mounts Assembly” in Section 2A (Page 2A-15).

Water Tube Related Item Inspection

CENDK1111606006

Refer to “Engine Holder / Driveshaft Housing / Mounts Related Component Inspection” in Section 2A (Page 2A-18).

Fuel System

Precautions

Precautions on Fuel System Service

CENDK1111700001

⚠ WARNING

Service operation of any type performed on the fuel system involves a risk of fire and injury if proper precautions are not taken.

Be sure to take the following precautions when working around gasoline or servicing the fuel system.

- **Disconnect battery cables except when battery power is required for servicing / inspection.**
- **Keep the working area well ventilated and away from open flame (such as gas heater) or sparks.**
- **Do not smoke or allow anyone else to smoke near the working areas.**
  Post a “NO SMOKING” sign.
- **Keep a fully charged CO_2 fire extinguisher readily available for use.**
- **Always use appropriate safety equipment and wear safety glasses when working around a pressurized fuel system.**
- **To avoid potential fire hazards, do not allow fuel to spill on hot engine parts or on operating electrical components.**
- **Wipe up fuel spills immediately.**
- **Before loosening or disconnecting the fuel feed line, be sure to relieve the fuel system of fuel pressure by following the fuel pressure relief procedure.**
- **When disconnecting a fitting on the fuel line, cover the fitting with a shop cloth to soak up the small amount of fuel that may flow out from the disconnected fuel line. Put the used cloth in an approved container.**
- **Since fuel hose connections vary with the pipe type, connect and clamp each hose using the correct method for each specific connection.**
  After connecting a hose, check that there is no twist or kink in the hose.
- **When installing hose clamps, position tabs to avoid contact with other parts.**
- **Be sure hoses do not contact rods, levers or other components with engine either operating or at rest.**

General Description

Electronic Fuel Injection System Description

CENDK1111701001

The fuel injection system used by the DF15A/20A is a speed-density, multi-point, sequential, electronic fuel injection type.
The fuel injection system is composed of the fuel line components, air intake components, and components for system control (ECM, sensors, switches, etc.).

Fuel Injection Control System Outline

Sensors are mounted at precise locations on the motor to monitor the current conditions of engine operation and send signals to the ECM.
Based on these signals, the ECM determines the optimum fuel injection time duration (fuel amount), fuel injection timing (multi-point sequential timing) and controls the injector operating signals accordingly.
In regards to fuel injection timing, the fuel injection end timing is set depending on engine rpm. The ECM calculates the amount of fuel injection based on the engines operating conditions, and determines the fuel injection start timing.
In the injection timing chart below, the injection end timing is set at 210° BTDC on the intake stroke.

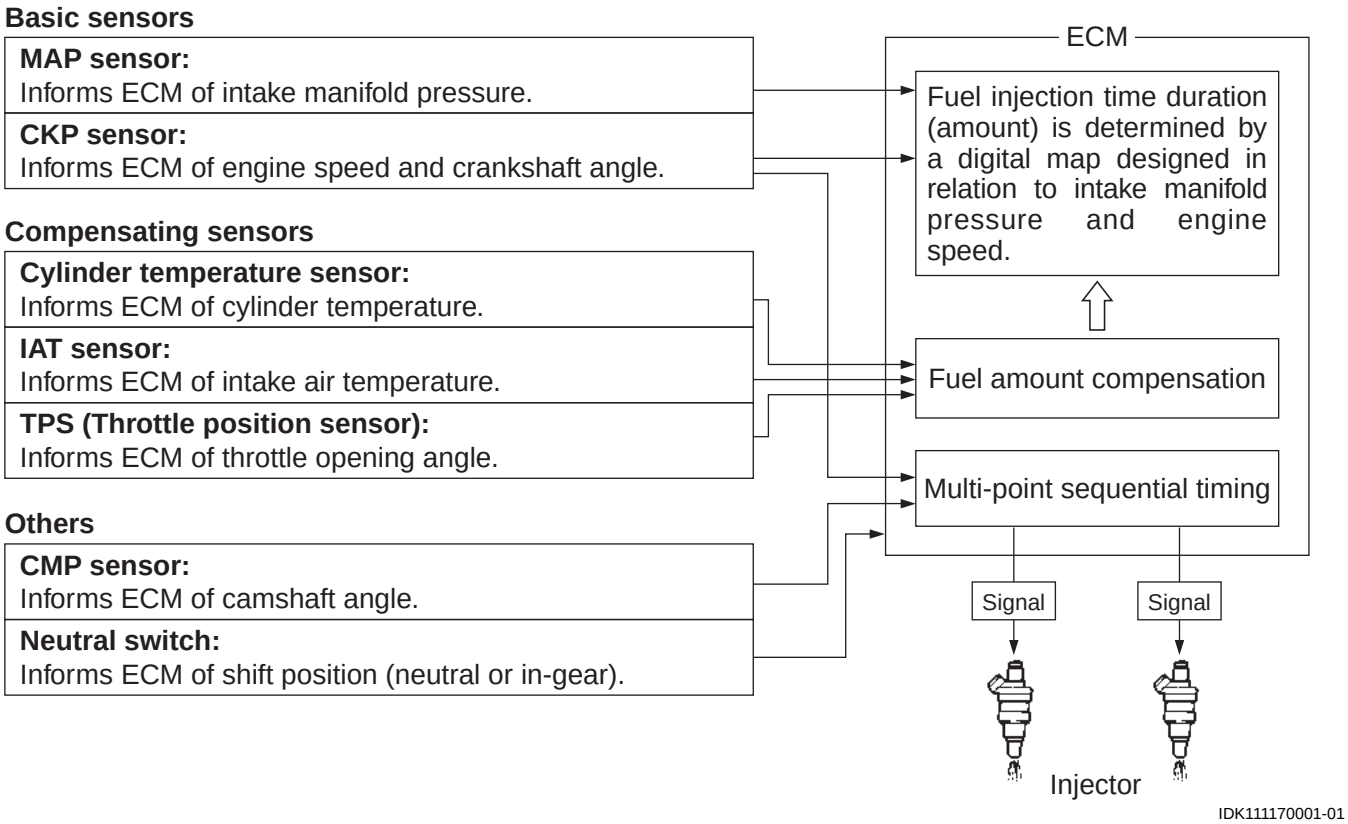

IDK111170001-01

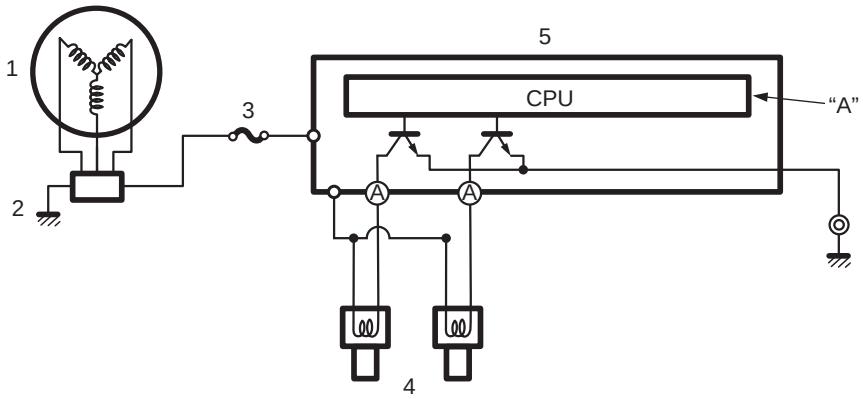

IDK111170002-03

1. Battery charge coil	3. 10 A fuse	5. ECM
2. Rectifier / Regulator	4. Injector	"A": Sensor/switch signal input

Fuel Injection Timing Chart

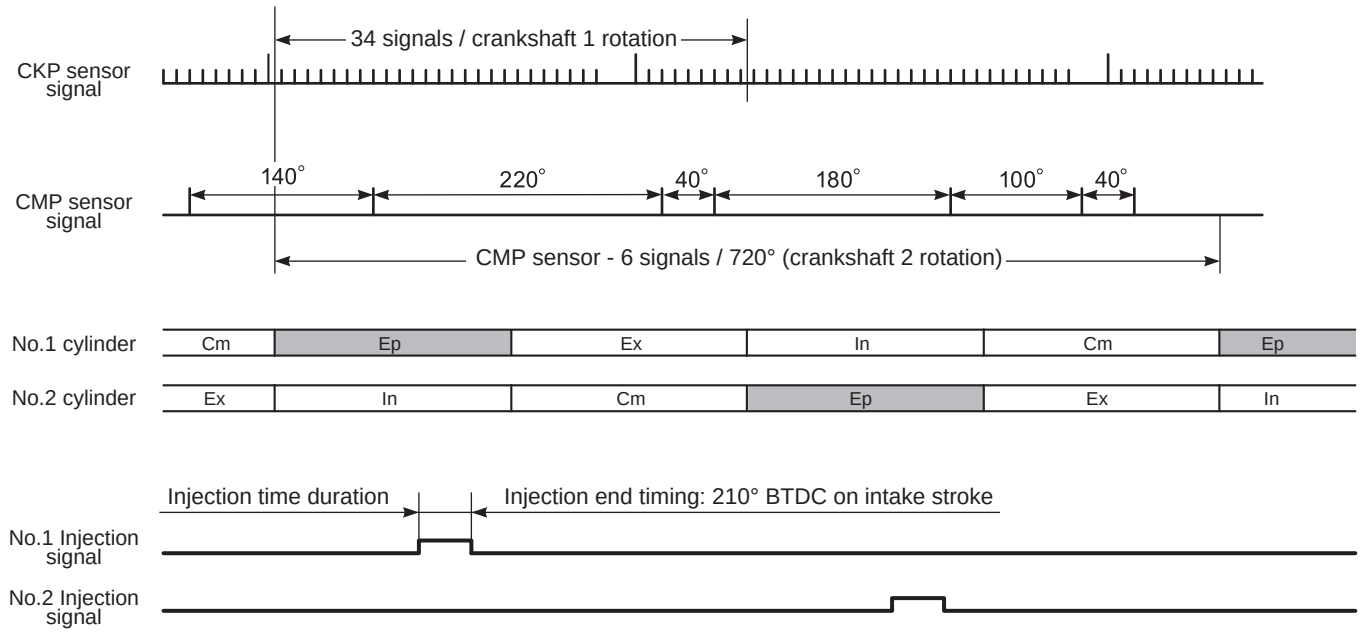

Cm.: Compression, Ep.: Explosion, Ex.: Exhaust, In.: Intake,

IDK111170003-02

Fuel Injection Control Mode

When cranking:
Fuel is simultaneously injected to all cylinders according to the “Start up mode” map in relation to crankshaft angle.

After start (Fast-idle function):
The fuel injection amount is controlled so that it is increased until the cylinder temperature comes to the normal operating temperature.

When idling / trolling:
The fuel injection amount is controlled to maintain a stable engine speed at the specified idle / trolling rpm.

When accelerating:
The fuel injection amount is controlled to increase.

When decelerating:
The fuel injection amount is controlled to decrease.
The fuel injection is also cut off on very rapid engine deceleration.

Fuel Delivery System Components Description

CENDK1111701002

The fuel delivery system is composed of the low pressure fuel line components (fuel tank, filter, pump etc.), fuel vapor separator, high pressure fuel pump, fuel pressure regulator (located in the high pressure fuel pump), delivery pipe, fuel injectors and hoses.

Fuel is supplied through the primer bulb, low pressure fuel filter, and low pressure fuel pump to the fuel vapor separator.

Fuel flow from the fuel vapor separator is pressurized by the high pressure fuel pump and supplied through the fuel delivery pipe to the fuel injectors.

The pressure regulator maintains fuel pressure in the feed line at absolute fuel pressure of approx. 300 kPa (3.0 kg/cm^2, 43 psi.). This pressure is maintained at a constant level.

When fuel feed line pressure exceeds more than approx. 300 kPa (3.0 kg/cm^2, 43 psi.), the valve in the fuel pressure regulator will open and return the excess fuel to the vapor separator chamber.

Pressurized fuel enters into the intake ports through the fuel injector based on the sequential signals supplied from the ECM.

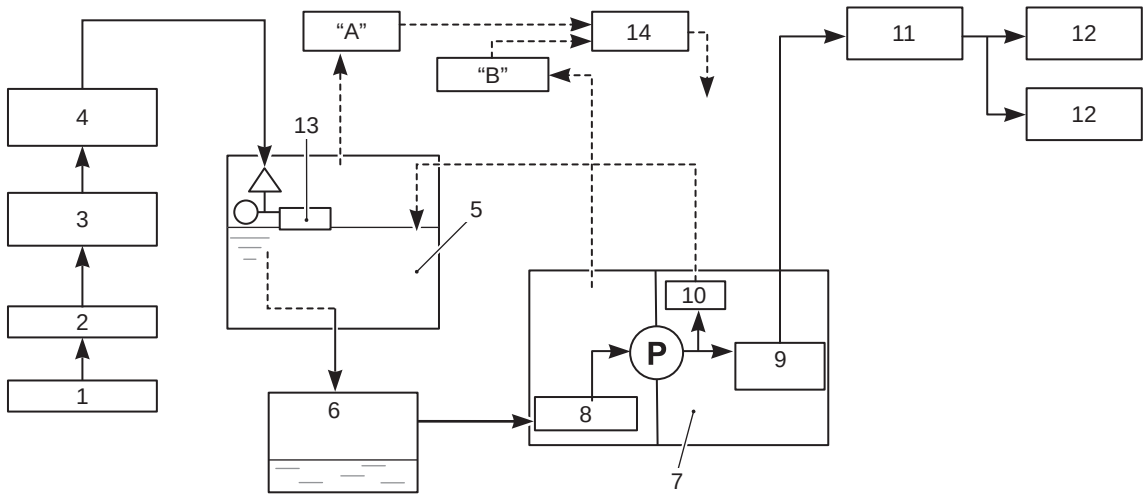

IDK111170004-04

1. Fuel tank	7. High pressure fuel pump	13. float
2. Primer bulb	8. Mesh filter	14. Evaporation chamber
3. Low pressure fuel filter	9. Mesh filter	"A": Evaporation gas
4. Low pressure fuel pump	10. Fuel pressure regulator	"B": Fuel vapor
5. Fuel vapor separator	11. Fuel delivery pipe	
6. Fuel cooler	12. Fuel injector	

Fuel Vapor Separator

The fuel vapor separator incorporates a float system that maintains a constant fuel level inside the separator chamber. As the fuel level decreases, fuel flows into the vapor separator from the low pressure fuel pump.
The function of this unit is to separate vapors from fuel delivered by the low pressure fuel pump or fuel returned from the fuel pressure regulator.
This vapor is routed through the evaporation hose to the atmosphere.

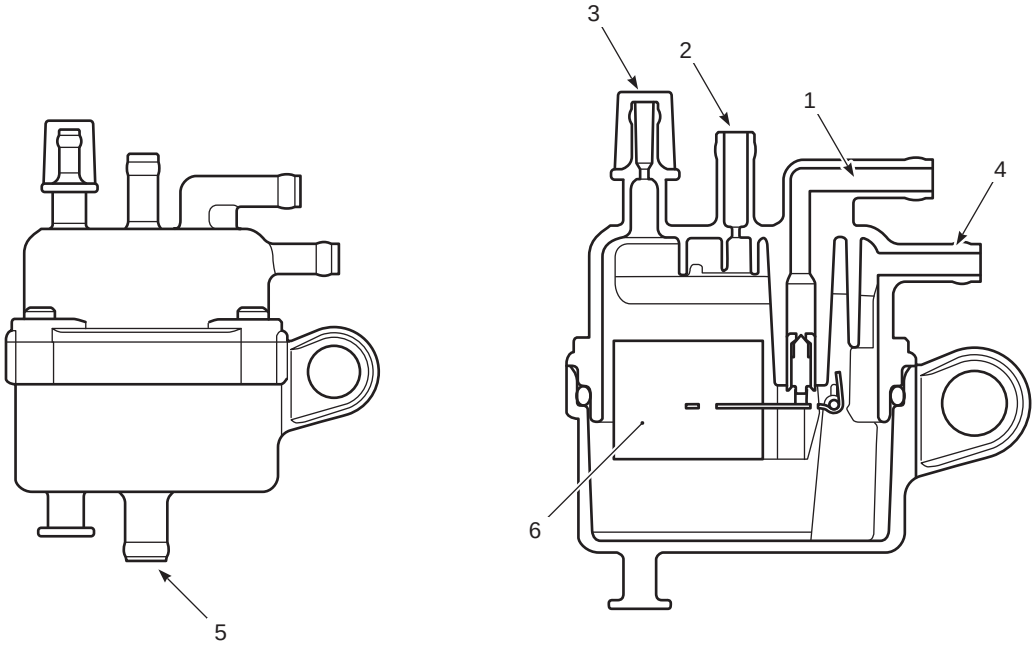

IDK111170005-02

1. Fuel inlet (from low pressure fuel pump)	3. Cap	5. Fuel outlet (to fuel cooler)
2. Air vent	4. Return fuel inlet (from high pressure fuel pump / fuel pressure regulator)	6. Float

High Pressure Fuel Pump

The high pressure fuel pump is an “integral” type.
The pump is located on cylinder head cover.
To supply the optimum fuel amount, the pump is driven by the duty cycle signal from the ECM.

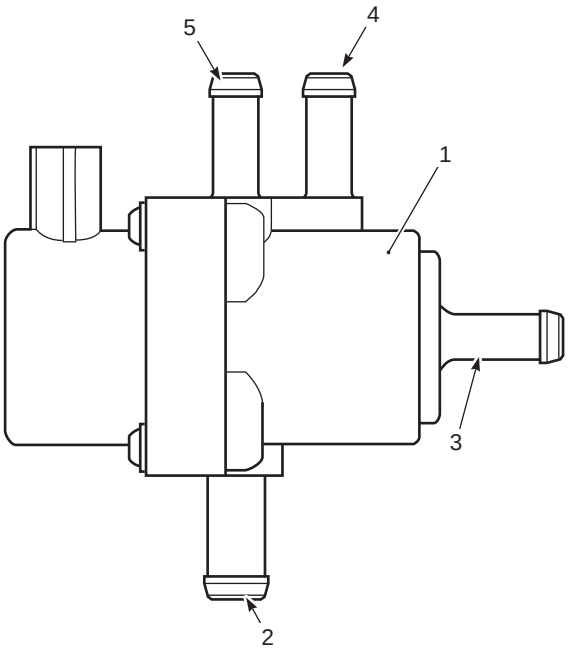

IDK111170006-02

1. High pressure fuel pump	3. Fuel outlet	5. Bubble (air) outlet
2. Fuel inlet	4. Return fuel outlet	

Fuel Pressure Regulator

The fuel pressure regulator is located in the high pressure fuel pump.
The regulator's function in the system is to maintain a constant fuel pressure relative to the injector while the engine is operating.
Fuel pressure, adjusted by the regulator, is constantly maintained at absolute fuel pressure of approx. 300 kPa (3.0 kgf/cm^2, 43 psi.).
By-pass fuel is returned to the fuel vapor separator chamber.

Fuel Injector

The fuel injector is an electromagnetic valve operated by a signal from the ECM.
When the injection signal is supplied to the fuel injector, the solenoid coil is energized pulling up the plunger.
This opens the injector valve and injects fuel.
Because the fuel pressure is kept constant, the amount of fuel injected is determined by the amount of time (duration) the valve is open.

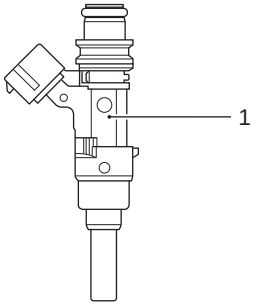

IDK111170060-03

1. Fuel injector	

High Pressure Fuel Pump Control System Description

CENDK1111701003

To supply the optimum fuel amount, the ECM controls the fuel pump drive duty cycle, a repeated "ON" / "OFF" signal, at a specified rate (1 000 times a second).
Based on fuel injection amount, the ECM determines the optimum duty cycle (repeating "ON" time rate within a cycle) and sends this signal to the fuel pump.

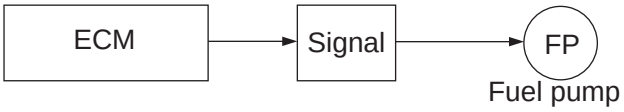

IDK111170007-02

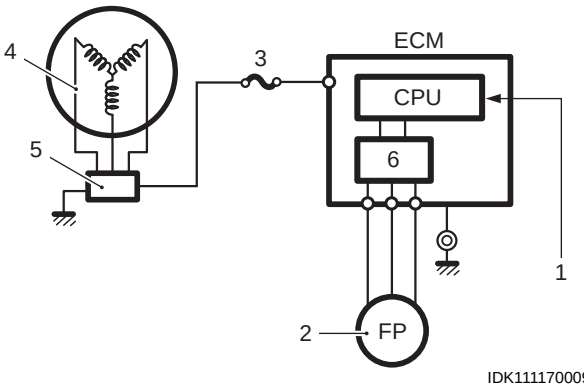

IDK111170009-02

1. Sensor/switch signal input	4. Battery charge coil
2. Fuel pump	5. Rectifier / Regulator
3. 10 A fuse	6. Pump driver

Duty cycle signal for fuel pump (example: 80% duty)

$$\frac{\text{“ON” time}}{\text{1 cycle time}} \times 100 = \text{duty (\%)}$$

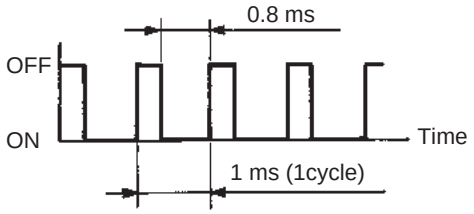

IDK111170011-01

Control Modes

When cranking:

The fuel pump is controlled to operate at “start-up” mode.

When running (Normal operation):

The fuel pump is controlled to operate at a 50 – 100% duty cycle based on the current engine speed and fuel injection amount.

Air Intake Components Description

CENDK1111701004

Air, after entering through the silencer case, passes through the throttle body and flows into the inlet manifold where it is then distributed to the intake manifold.

Inlet manifold pressure, monitored by the MAP sensor, is an indirect measurement of the intake air amount.

When the throttle is fully closed, the main supply of intake manifold air necessary to sustain engine idle passes through the by- pass air passage.

To maintain engine idle speed at specification, the ECM controlled IAC valve supplies a regulated amount of additional air through the IAC (idle air control) passage.

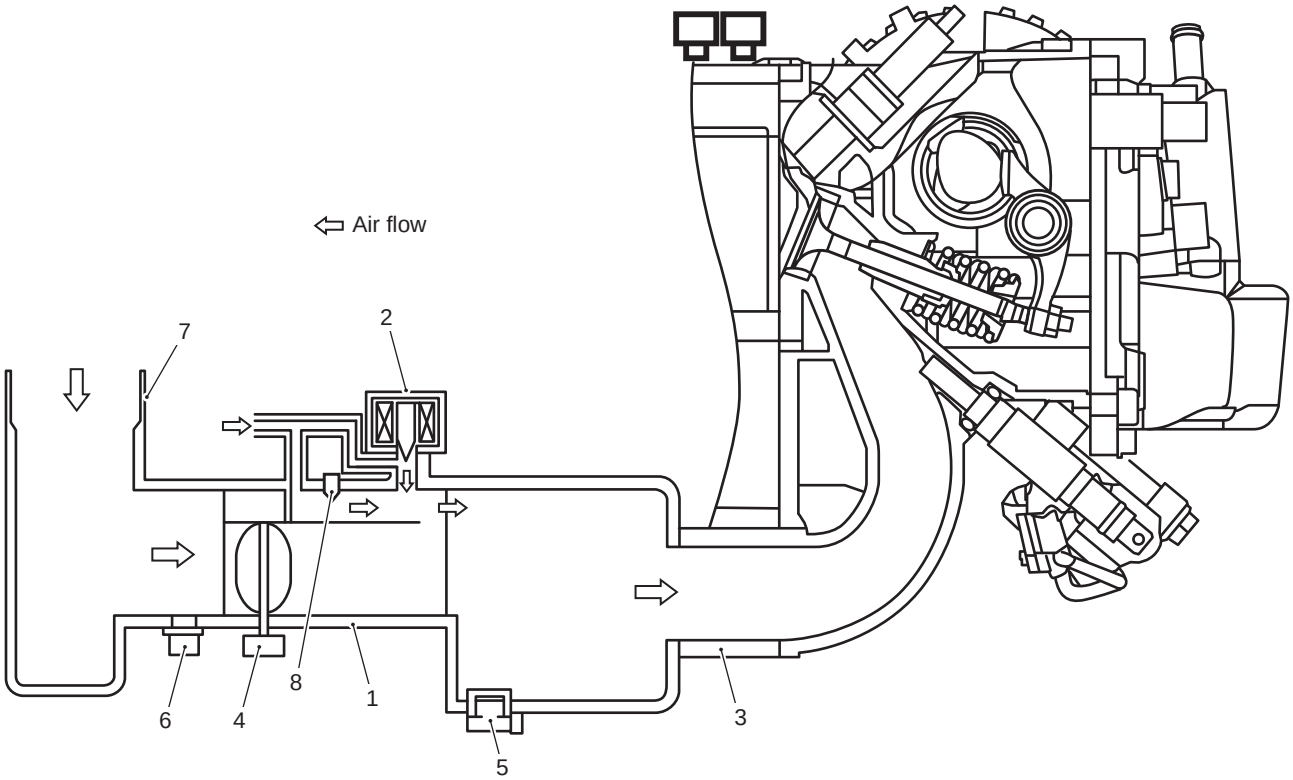

IDK111170012-02

1. Throttle body	3. Intake manifold	5. MAP sensor	7. Air intake silencer
2. IAC valve	4. Throttle position sensor	6. IAT sensor	8. By-pass air screw

Throttle Body

- The throttle body assembly consists of the main bore, throttle valve, by-pass air passage, IAC passage, by-pass air screw and TPS (Throttle position sensor).
- The throttle body adjusts the intake air amount with the throttle valve which is connected to the throttle lever linkage.
- The TPS installed on the throttle body informs of throttle valve opening angle.

NOTE

Do not try to adjust or remove any of the throttle body component parts (Throttle position sensor, throttle valve, throttle stop screw, etc.).
These components have been factory adjusted to precise specifications.

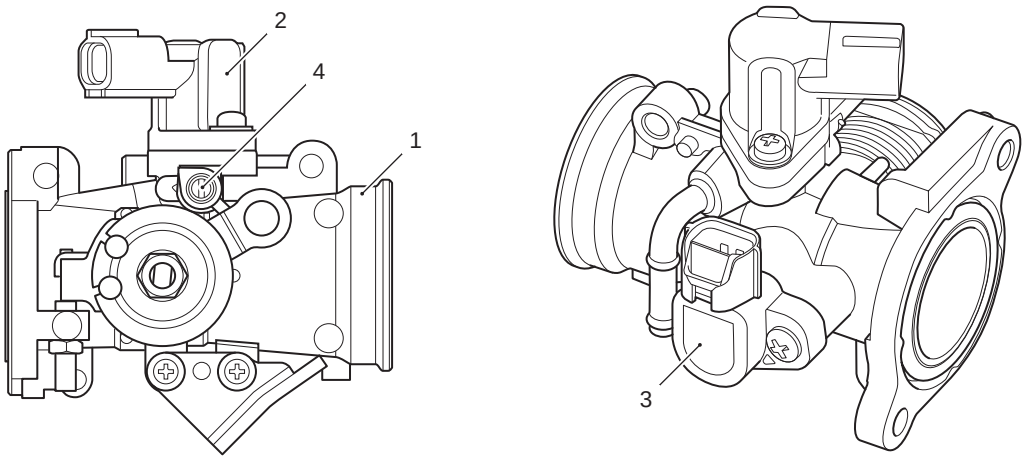

IDK111170015-01

1. Throttle body assembly	2. IAC valve	3. TPS	4. By-pass air screw

By-pass air screw / passage

Since the throttle valve is almost fully closed when idling / trolling, the main flow of air necessary to maintain idling / trolling speed passes through the by-pass air passage.
The by-pass air adjustment screw controls the flow of air through the passage and provides a means of partially adjusting the total amount of air necessary for idling / trolling.

NOTE

For the by-pass air screw adjustment procedure, refer to “Idle Speed and Idle Air Control (IAC) Duty Inspection” in Section 0B (Page 0B-14).

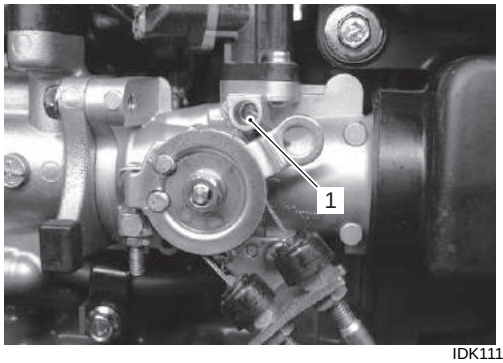

IDK111170020-01

1. By-pass air screw

IAC valve / passage

The IAC valve is a solenoid plunger type mounted on the throttle body.
Its purpose is to control the amount of intake air flowing from the IAC passage.
The IAC valve is driven by the duty cycle signal from the ECM.

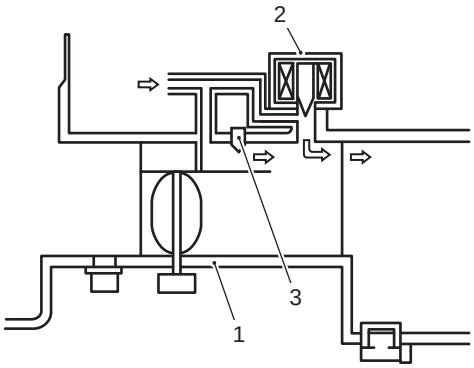

IDK111170016-01

1. Throttle body	2. IAC valve	3. By-pass air screw

Idle Air Control System Description

CENDK1111701005

The ECM controls the duty cycle signal of the IAC valve to regulate a portion of the intake air flow to the intake manifold.
This system is used for the following purposes:

- To keep idling / trolling at the specified speed.
- To improve drivability when decelerating. (Dash-pot effect)
- To improve engine starting and warm-up performance. (Fast-idle function)

The sensors / switch shown below monitor current engine condition and send signals to the ECM. Based on these signals, the ECM determines the optimum duty cycle (repeating “ON” time rate within a cycle).
A repeating ON/OFF signal at a specified rate (10 times a second) is then sent to the IAC valve.

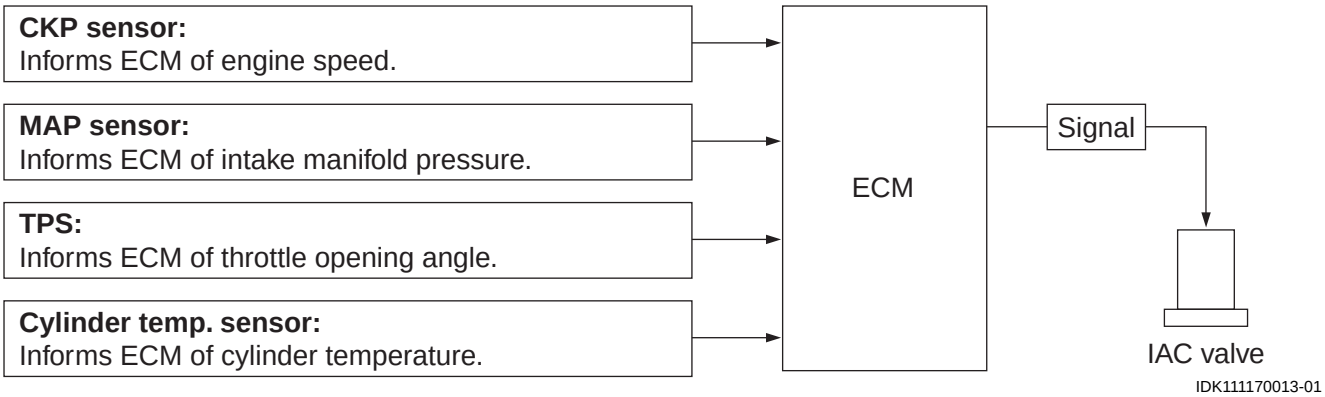

IDK111170013-01

IAC Valve Control Mode

Before started:

The IAC valve is always closed when engine is not running. (0% duty)

When cranking:
The IAC valve is controlled to operate at 100% duty.

After start (fast-idle function):
The IAC valve is controlled to operate at 100% duty until the timer, which was set according to cylinder temperature at cranking, expires.

When idling / trolling:
The IAC valve is controlled so that the engine speed is stable at the idling / trolling speed specified.
During this period, the IAC valve has a duty cycle of approx. 10% but will vary slightly as idling / trolling conditions change.

When running (normal operation):
The IAC valve is controlled to operate at 10 – 100% duty, which depends on the current engine conditions.

When decelerating (dash-pot effect):
When the throttle valve is suddenly returned to full close and the throttle position sensor signal changes to “fully closed”, the IAC valve operates at a controlled gradual return to idle / troll operating duty to prevent engine stalling or unstable running.

NOTE

Due to the limited intake air flow from the IAC passage and in order to effectively use both the “Dash-pot effect” and “Fast-idle function”, the by-pass air screw must be adjusted to provide IAC valve operation at 10 ± 5% duty at the engine idling / trolling specification.
For the by-pass air screw adjustment procedure, refer to “Idle Speed and Idle Air Control (IAC) Duty Inspection” in Section 0B (Page 0B-14).

Diagnostic Information and Procedures

Fuel Pressure Inspection

CENDK1111704002

⚠ WARNING

Gasoline is a flammable material that can cause fire hazard or burns.

Before starting the following procedure, be sure to observe “Precautions on Fuel System Service:” in order to reduce the risk or fire and personal injury.

1) Relieve fuel pressure in fuel feed line.
   Refer to “Fuel Pressure Relief Procedure” (Page 1G-14).
2) Remove the bolts (1) and high pressure fuel pump guard (2).

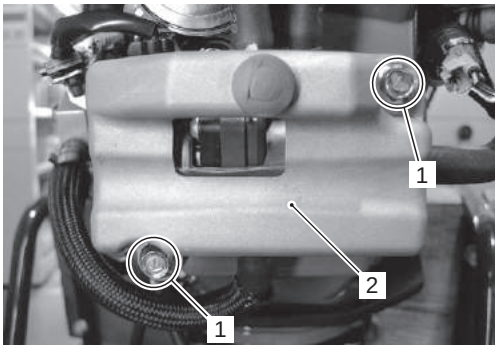

IDK111170021-01

3) Disconnect high pressure fuel feed hose (3) from fuel delivery pipe (4).

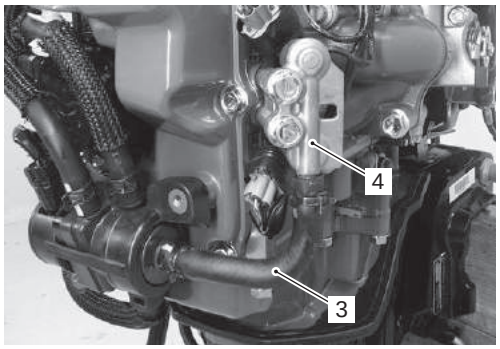

IDK111170022-02

4) Connect special tools (pressure gauge, pressure hose and pressure joint) between fuel feed hose (3) and fuel delivery pipe as shown in figure.
Clamp the hose securely to ensure that no leaks occur during checking.

⚠ WARNING

Gasoline is a flammable material that can cause fire hazard or burns.

A small amount of fuel may be released when the fuel feed hose is disconnected.
Place container under the fuel feed hose or fuel delivery pipe with a shop cloth so that the released fuel is caught in the container or absorbed by the cloth. Place the fuel soaked cloth in an approved container.

Special tool
TOOL (A): 09912–58442 (Fuel pressure gauge)
TOOL (B): 09912–58432 (Fuel pressure hose)
TOOL (C): 09912–58490 (3-way joint & hose)

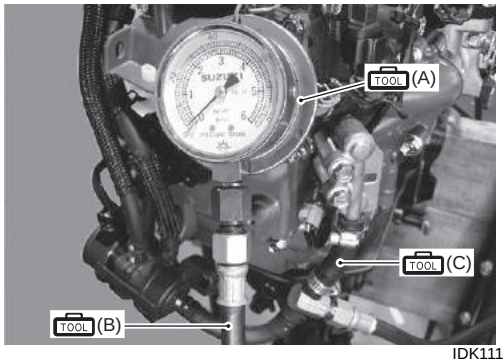

IDK111170023-01

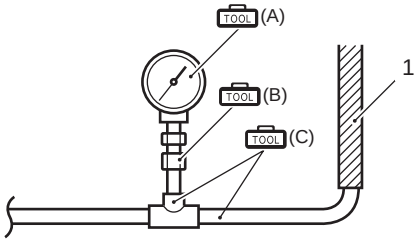

IDK111170014-01

1. Fuel delivery pipe

5) Squeeze fuel primer bulb until you feel resistance. Pull the starter grip sharply several times to fill the high pressure fuel feed line with fuel.
Repeat this procedure 3 or 4 times to pressurize the fuel system and then check fuel pressure.

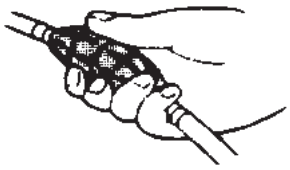
IAJ311170008-01

6) Check for any signs of fuel leakage.
7) Measure fuel pressure at cranking or idle speed operation.
If out of specification, check each possibly defective parts (high pressure fuel pump, fuel pressure regulator, fuel injector, etc.).
Replace if found defective.

Fuel pressure
Standard: Approx. 300 kPa (3.0 kg/cm², 43 psi)

⚠ WARNING

Gasoline is a flammable material that can cause fire hazard or burns.

The fuel feed line is under high fuel pressure, make sure to release fuel pressure according to the fuel pressure relief procedures mentioned earlier.
Use the following procedures to remove the fuel pressure gauge.

- **Place a container under the joint to catch the fuel.**
- **Cover the joint with rag and loosen joint nut slowly to gradually release any residual fuel pressure.**

8) After checking fuel pressure, remove fuel pressure gauge.

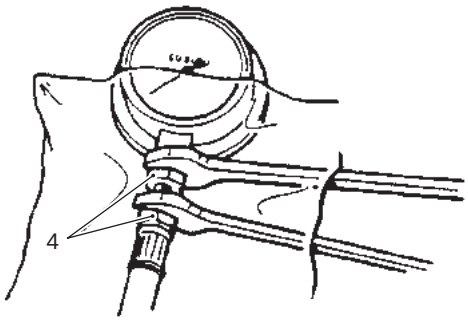

I9J011170019-01

4. Joint nut

9) Reconnect fuel line.
10) Check the fuel system for leaks.

Fuel System Diagnosis

CENDK1111704001

Condition	Possible cause	Correction / Reference item
Engine will not start or hard to start. (Fuel does not reach the fuel delivery pipe.)	Clogging, bending or improper routing of fuel hose.	*Clean, repair or replace.*
	Fuel pump failure.	*Replace.*
	High pressure fuel pump failure.	*Replace.*
	Fuel injector(s) failure.	*Replace.*
	Fuel pump failure.	*Replace.*
	Wiring connection failure.	*Repair or replace.*
Engine will not start or hard to start.	Throttle position sensor failure.	*Replace.*
	MAP sensor failure.	*Replace.*
	ECM failure.	*Replace.*
	Cylinder temp. sensor failure.	*Replace.*
	IAT sensor failure.	*Replace.*
	High pressure fuel pump failure.	*Replace.*
	Fuel hose improperly routed.	*Reroute properly.*
Unstable idling / trolling or engine tends to stall.	Neutral switch failure.	*Replace.*
	Throttle position sensor failure.	*Replace.*
	IAC control system failure.	*Check idle air control system.*
	IAC passage clogged.	*Clean.*
	ECM failure.	*Replace.*
	Wire continuity/ connection failure.	*Repair or replace.*
	Fuel injector(s) clogged.	*Replace.*
	High pressure fuel pump failure.	*Check fuel pump and its circuit. Replace.*
	Fuel filter clogged.	*Clean or replace.*
	Clogging, bending or improper routing of fuel hose.	*Clean, reroute, repair or replace.*
Insufficient engine power in high speed range. (Air intake system failure.)	Air leakage from air intake system.	*Repair or replace.*
Insufficient engine power in high speed range. (Control circuit or sensor failure.)	Fuel pressure too low.	*Check fuel pressure. Repair or replace.*
	Throttle position sensor failure.	*Replace.*
	ECM failure.	*Replace.*
Insufficient engine power in high speed range. (Engine internal parts or electrical equipment failure.)	Fuel injector(s) clogged.	*Replace.*
	Throttle position sensor failure.	*Replace.*
	ECM failure.	*Replace.*

Fuel Injection System Troubleshooting

CENDK1111704003

Before starting the troubleshooting, make sure that:

- There is no self-diagnostic code indication.
- Emergency stop switch plate is set in place.

Step 1

Check fuel injector operating sound.

- Check each injector for operating sound at engine cranking. (Refer to page 1G-17.)

Do all injector make operating sound?

Yes	Fuel injector circuit is in good condition.
No	Go to step 2.

Step 2

Check fuel injector resistance.

- Stop the engine, disconnect connectors from fuel injectors.
- Check for proper connection to fuel injector at each terminal.
- If good condition, check all fuel injector for resistance. (Refer to page 1G-18.)

Are all injectors in good condition?

Yes	Go to step 3.
No	Faulty fuel injector.

Step 3

Check fuel injector power supply.

- Measure voltage between each “Gray/Red” wire terminal of fuel injector connector and engine body ground with engine cranking.

Special tool
CD-77 : Stevens peak reading voltmeter CD-77

Tester knob indication
POS50

Is voltage 5 V or over?

Yes	Go to step 4.
No	• “Gray/Red” wire open or shorted. • If it is in good condition, check ECM power source and ground circuit.

Step 4

Check wire circuit.

- Disconnect connector from ECM.
- Measure resistance between each “O/B”, “B/Br” wire terminal of the fuel injector connector and body ground.

Is resistance infinity?

Yes	Go to step 5.
No	“O/B” and/or “B/Br” wire(s) are shorted to ground.

Step 5

Check wire circuit.

- Connect the connector to ECM.
- Measure voltage between each “O/B”, “B/Br” wire terminal of fuel injector connector and body ground with engine cranking.

Special tool
CD-77 : Stevens peak reading voltmeter CD-77

Tester knob indication
POS50

Is voltage 0 V?

Yes	Go to step 6.
No	“O/B” and/or “B/Br” wire(s) are shorted to power supply circuit.

Step 6

Check fuel injector operating signal.

- Connect connectors to each fuel injector and ECM.
- Measure fuel injector operating signal between each “2”, “15”, terminal of ECM and body ground. (Refer to page 1G-19.)

Is voltage approx. 20 V or over?

Yes	If check result is satisfactory, substitute a known-good ECM and recheck.
No	“O/B” and/or “B/Br” wire(s) are open circuit.

Service Instructions

Fuel Pressure Relief Procedure

CENDK1111706016

After making sure that engine is cold, relieve fuel pressure as follows.

1) Stop the engine.
2) Loosen the bolts securing high pressure fuel pump guard (1).
   Disconnect high pressure fuel pump lead wire connector (2) at high pressure fuel pump.

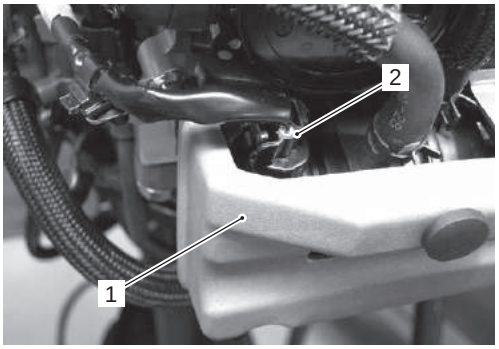

IDK111170024-01

3) Disconnect the ignition coil primary lead wire (3).

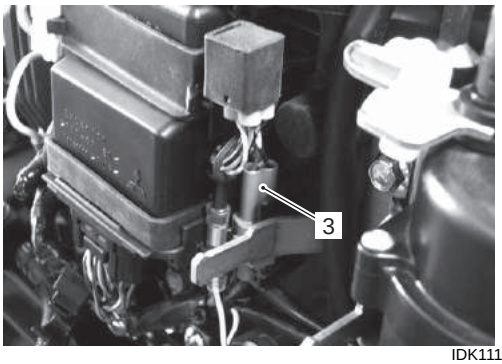

IDK111170025-01

4) Crank the engine several times to dissipate fuel pressure in lines.
5) Make sure fuel pressure has been removed by pinching high pressure fuel hose between finger tips (line should feel soft without pressure).

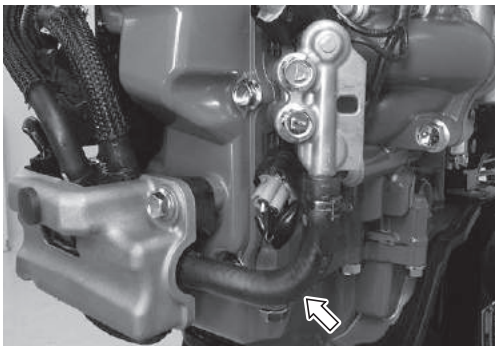

IDK111170054-01

6) Upon completion of servicing, connect ignition coil primary lead wire and high pressure fuel pump lead wire. Tighten the fuel pump guard bolts.

Fuel Line Removal and Installation

CENDK1111706001

Pay special attention to the following points when removing or installing fuel hoses.

⚠ WARNING

Gasoline is a flammable material that can cause fire hazard or burns.

Before starting the following procedure, be sure to observe “Precautions on Fuel System Service:” in order to reduce the risk or fire and personal injury.

- The fuel feed line is under high pressure, use special care when servicing it.
- Spilled gasoline should be wiped off immediately.
- Perform the following checks to ensure proper and safe operation of the repaired unit.
  – Check fuel hose routing.
    Refer to “Fuel Hose Routing” in Section 4B (Page 4B-2).
  – Check for fuel leakage.
    Refer to “Fuel Leakage Check Procedure” (Page 1G-14).

Fuel Line Inspection

CENDK1111706002

Visually inspect fuel lines for evidence of fuel leakage, cracking, deterioration, or damage. Make sure all clamps are secure. Replace parts as needed.

Fuel Leakage Check Procedure

CENDK1111706003

After performing any fuel system service, always be sure there is no fuel leakage by checking as follows.

1) Shift into “Neutral” position.
2) Ensure emergency stop switch lock plate is in place.
3) Squeeze fuel primer bulb until you feel resistance.
4) Pull the starter grip sharply several times.
5) Repeat step 3 and 4 to fill the high pressure fuel feed line with fuel.
6) Once pressurized, check all connections and components for any signs of leakage.

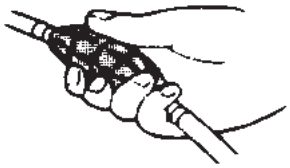

IAJ311170008-01

Inspection of Fuel Hose Connections

CENDK1111706004

Note that the fuel hose connection varies with each type of pipe. Be sure to connect and clamp each hose correctly by referring to the figure.

- For type “A” (short barbed end) pipe, the hose must completely cover pipe.

Type “A”

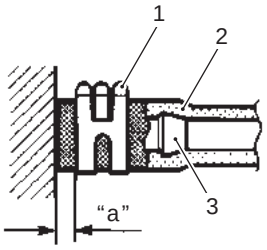

I9J011170012-01

1. Clamp (Clip)	3. Joint pipe
2. Hose	“a”: 3 – 7 mm (0.1 – 0.3 in)

- For type “B” (bent end) pipe, hose must cover the straight part of pipe by 20 – 30 mm (0.8 – 1.2 in.).

Type “B”

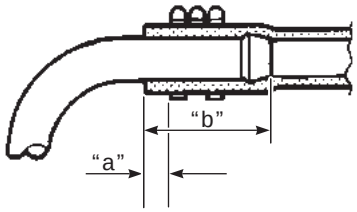

I9J011170013-01

“a”: 3 – 7 mm (0.1 – 0.3 in)	“b”: 20 – 30 mm (0.8 – 1.2 in)

- For type “C” pipe, hose must fit up against the flanged part of pipe.

Type “C”

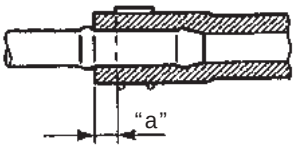

I9J011170014-01

“a”: 3 – 7 mm (0.1 – 0.3 in)

- For type “D” pipe, the hose must cover the pipe by 20 – 30 mm (0.8 – 1.2 in.).

Type “D”

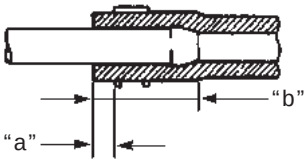

I9J011170015-01

“a”: 3 – 7 mm (0.1 – 0.3 in)	“b”: 20 – 30 mm (0.8 – 1.2 in)

Fuel Vapor Separator Removal and Installation

CENDK1111706017

NOTICE

Disassembling the fuel vapor separator can lead to troubles.

The fuel vapor separator is a non-repairable component.
Do not attempt to disassemble the fuel vapor separator.
It must be replaced as a complete unit if it is defective.

Removal

1) Loosen the fuel drain screw (1) and drain the gasoline into a suitable container.

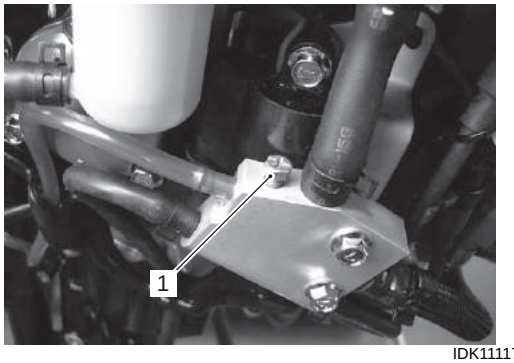

IDK111170027-01

2) Remove the low pressure fuel filter (2) from filter bracket.

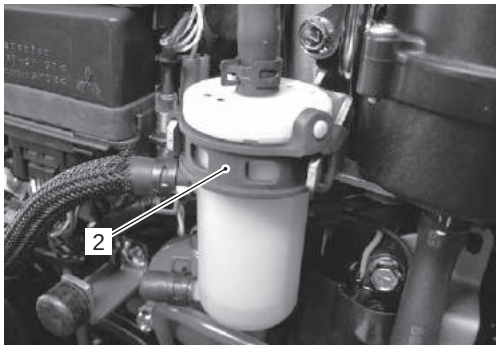

IDK111170028-02

3) Disconnect the fuel inlet hose (3), fuel return hose (4) and evaporation hose (5) from fuel vapor separator.

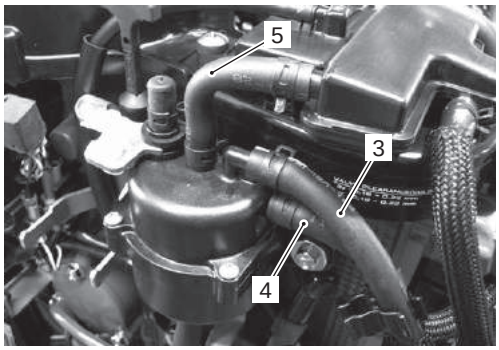

IDK111170029-01

4) Remove the bolt (6) and fuel vapor separator (7). Disconnect the fuel outlet hose (8) from fuel vapor separator.

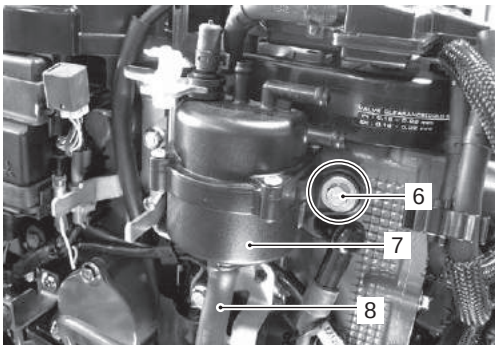

IDK111170030-01

Installation

Installation is in the reverse order of removal with special attention to the following steps.

- Install the fuel vapor separator, then tighten the bolt securely.
- Check to ensure that all removed parts are back in place.
- Check hose and wire routing.
  Refer to “Fuel Hose Routing” in Section 4B (Page 4B-2).
- Check for fuel leakage.
  Refer to “Fuel Leakage Check Procedure” (Page 1G-14).

Inspection of Fuel Vapor Separator

CENDK1111706018

NOTICE

Disassembling the fuel vapor separator can lead to troubles.

The fuel vapor separator is a non-repairable component.
Do not attempt to disassemble the fuel vapor separator.
It must be replaced as a complete unit if it is defective.

Fuel Vapor Separator Assembly

Inspect the fuel vapor separator.
If leakage, cracks, damage or other abnormal condition is found, replace fuel vapor separator assembly.

IDK111170055-01

High Pressure Fuel Pump Removal and Installation

CENDK1111706019

NOTICE

Disassembling the high pressure fuel pump can lead to troubles.

The high pressure fuel pump is a non-repairable component.
Do not attempt to disassemble the high pressure fuel pump.
It must be replaced as a complete unit if it is defective.

Removal

1) Relieve the fuel pressure in the fuel feed line according to “Fuel Pressure Relief Procedure”.
   Refer to “Fuel Pressure Relief Procedure” (Page 1G-14).
2) Remove both lower side covers.
   Refer to “Lower Side Cover Removal and Installation” in Section 2A (Page 2A-2).
3) Remove the bolts (1) and fuel pump guard (2).

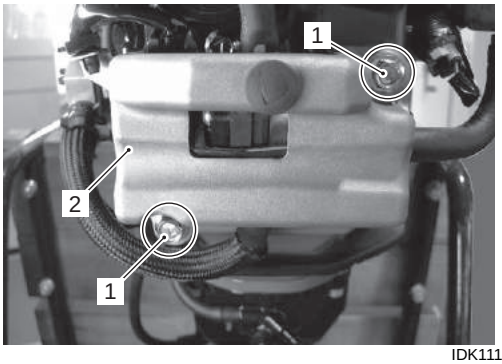

IDK111170031-01

4) Disconnect the pump lead wire connector (3) at high pressure fuel pump.

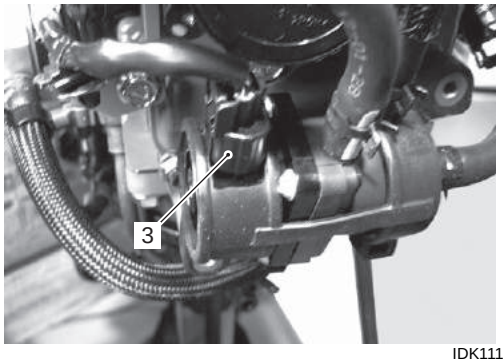

IDK111170032-01

5) Disconnect the fuel inlet hose (4) / outlet hose (5). Disconnect the fuel vapor hose (6) and fuel return hose (7).
6) Remove the high pressure fuel pump from cylinder head cover.

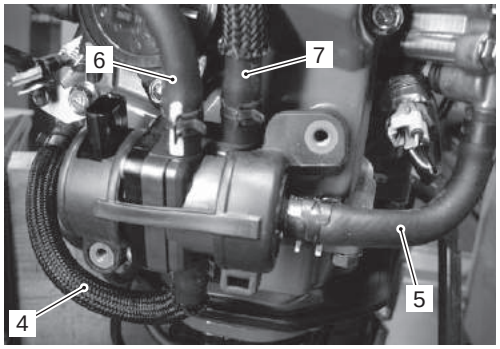

IDK111170033-01

Installation

Installation is in the reverse order of removal with special attention to the following steps.

- Install the high pressure fuel pump, pump guard, then tighten bolt securely.
- Check to ensure that all removed parts are back in place.
- Check hose and wire routing.
  Refer to “Fuel Hose Routing” in Section 4B (Page 4B-2).
- Check for fuel leakage.
  Refer to “Fuel Leakage Check Procedure” (Page 1G-14).

High Pressure Fuel Pump Inspection

CENDK1111706026

1) Disconnect pump lead wire connector from high pressure fuel pump.
2) Check each coil of fuel pump for resistance.

Fuel pump resistance

Terminals	Resistance
Between “1” and “2”	**2.0 – 2.6 Ω**
Between “2” and “3”	
Between “3” and “1”	

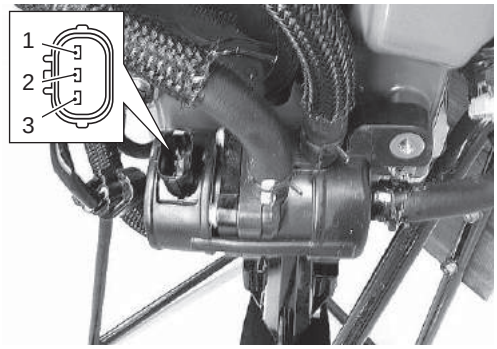

IDK111170056-01

If out of specification, replace high pressure fuel pump.

Fuel Injector Inspection with Injector in Place

CENDK1111706020

1) Using a sound scope or equivalent, check the operating sound of the fuel injector when the engine is running or cranking.
   Injector operating sound cycle should vary according to engine speed.
   If no sound or an unusual sound is heard, check injector circuit (wire or connector) or injector.

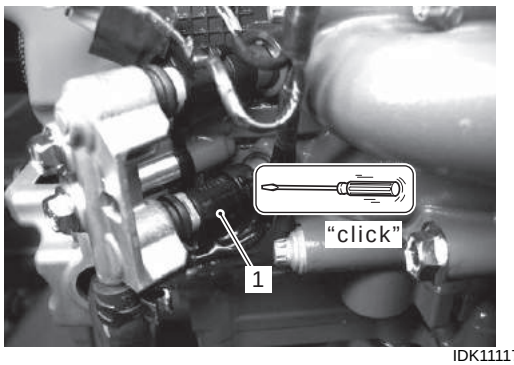

IDK111170034-02

1. Injector body

2) Disconnect the lead wire connector from the fuel injector.
3) Connect a digital tester between the terminals of the injector and measure resistance.
   If out of specification, replace the fuel injector.

   Special tool
   TOOL : 09930–99320 (Digital tester)

   Tester knob indication
   Resistance (Ω)

   Fuel injector resistance
   Standard: 10 – 14.0 Ω

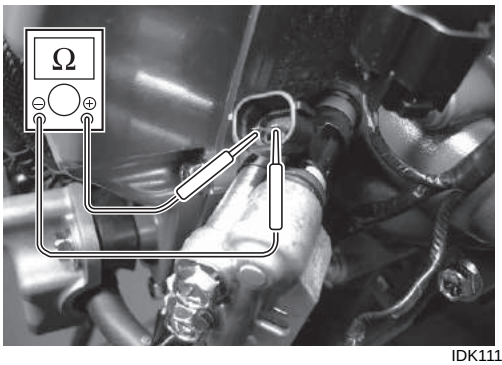

IDK111170035-01

4) Connect the lead wire connector to the fuel injector securely.

Individual Fuel Injector Operating Sound Inspection

CENDK1111706021

1) Disconnect the ignition coil lead wire connector from the ignition coil.
2) Disconnect the fuel injector lead wire connector and connect the test cord.

   Special tool
   TOOL (A): 09930–89260 (Injector test cord (A))

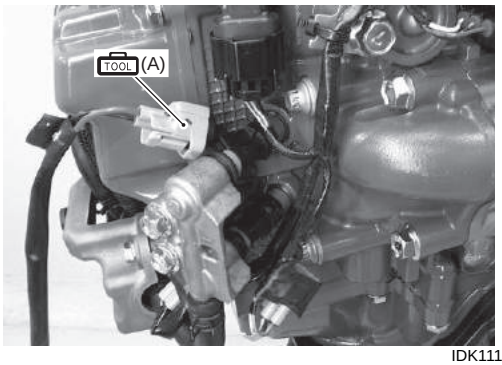

IDK111170036-03

3) Connect the Gray wire to battery negative terminal.
4) Momentarily touch the Black/ Yellow wire to battery positive (+) terminal and check for injector operating sound.
   If out of specification, replace fuel injector.

NOTICE

If battery power is applied too long in any of the following tests, the coil of the fuel injector may burn.

Fuel injector test must be completed within few seconds to avoid burning of the coil.

Fuel injector operating sound
“click”

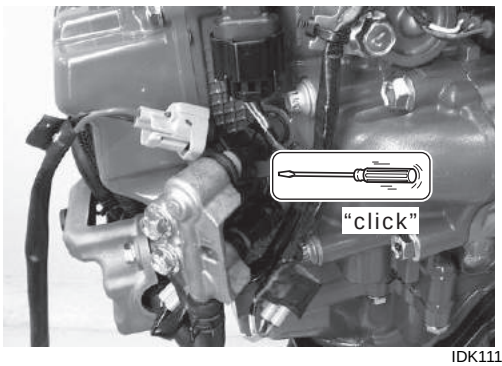

IDK111170057-01

Fuel Injector Operating Signal Inspection

CENDK1111706022

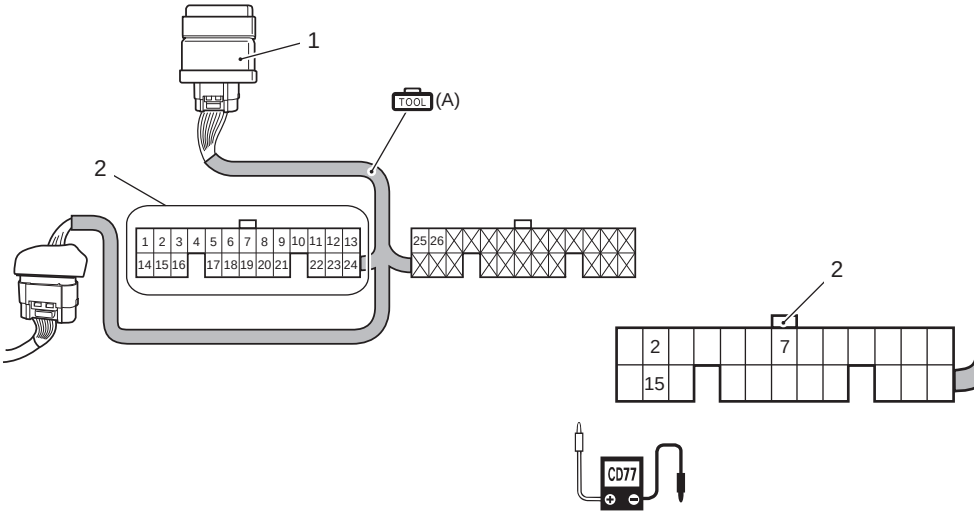

IDK111170017-04

1. ECM	2. White connector

Special tool
TOOL (A): 09930–88940 (26-pin test cord)
CD-77 : Stevens peak reading voltmeter CD-77

Tester knob indication
POS 50

1) Disconnect ignition coil lead wire connector from the ignition coil.
2) Connect the test cord between the ECM and wire harness as shown in figure.
3) Connect the tester probe (“–”, Black) to No.7 terminal (or to body ground) as shown in figure.
4) Connect the tester probe (“+”, Red) to each terminal.

Injector	Terminal	Wire color (Engine harness)
No.1	2	O/B
No.2	15	B/Br

5) Crank the engine and measure the voltage. If out of specification, inspect the related parts as described in “Fuel System Diagnostic Information/Fuel Injection System Troubleshooting”.
   Refer to “Fuel System Diagnosis” (Page 1G-12) and “Fuel Injection System Troubleshooting” (Page 1G-13).

   Fuel injector operating signal
   Standard: Approx. 20 V or over

Fuel Injector Removal and Installation

CENDK1111706023

Removal

1) Relieve the fuel pressure in the fuel feed line according to “Fuel Pressure Relief Procedure.” Refer to “Fuel Pressure Relief Procedure” (Page 1G-14).
2) Disconnect the two fuel injector connectors (1).

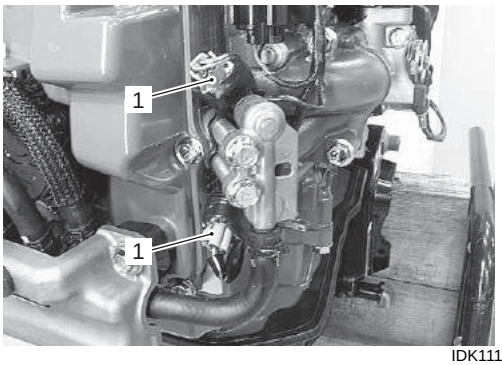

IDK111170058-01

3) Loosen the clamp (2) and place a large cloth over the end of fuel feed hose (3).
   Slowly pull the fuel feed hose from the fuel delivery pipe.
   Drain any excess fuel in the hose into a small container.

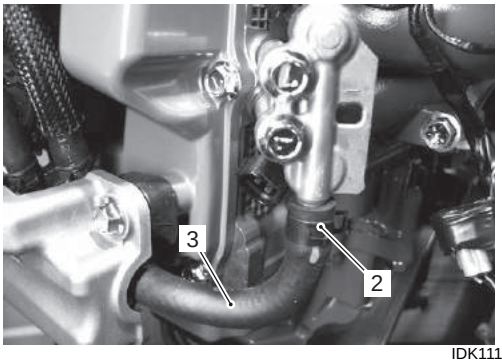

IDK111170038-01

4) Remove two bolts and fuel delivery pipe (4) (with fuel injectors).

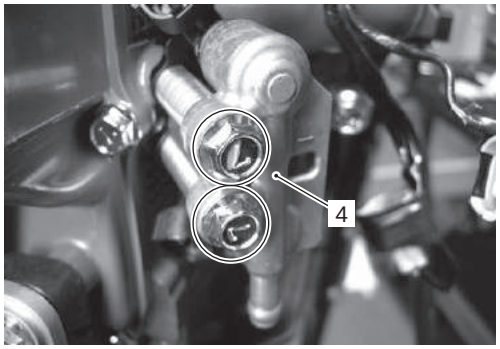

IDK111170039-01

⚠ WARNING

Gasoline is a flammable material that can cause fire hazard or burns.

A small amount of fuel may be released when the fuel injector is removed from delivery pipe.
Place a shop cloth under fuel injector before removal to absorb any fuel released.
Dispose of fuel soaked cloth in appropriate container.

5) Remove each injector (5) from delivery pipe.

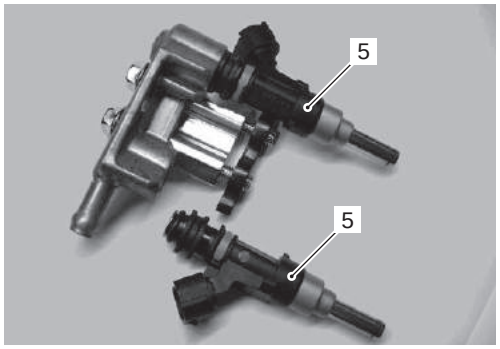

IDK111170040-01

Installation

Installation is in the reverse order of removal with special attention to the following steps.

⚠ WARNING

Failure to take proper precaution when reinstalling fuel injector can result in fuel leakage or damage.

Do not re-use O-ring and cushion once removed.
Always use new parts.

1) Install grommet (1) to injector.
   Replace the injector O-ring (2) with new one using care to avoid nicks or cuts during installation.

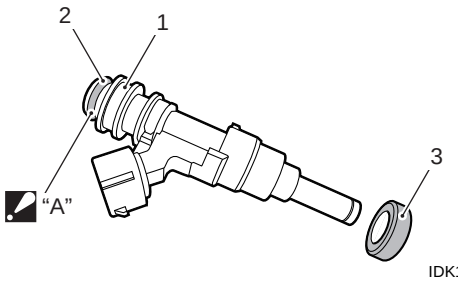

IDK111170018-01

"A": Apply fuel to O-ring.

2) Replace the injector cushion (3) with a new one and install to the cylinder head.

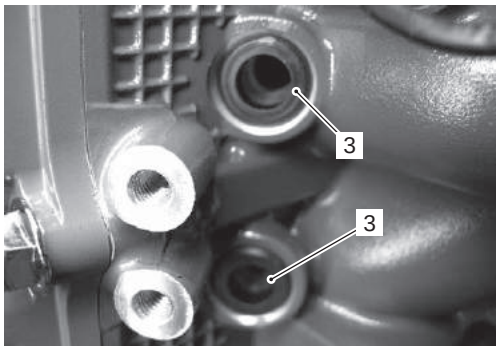

IDK111170041-01

3) Assemble the bolts (4), delivery pipe (5), spacer (6) and insulator (7).

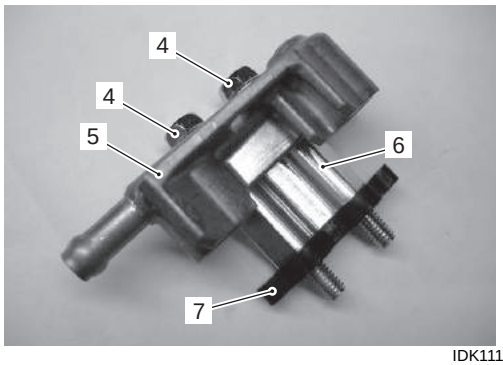

IDK111170042-01

4) Apply a thin coat of fuel to injector O-rings, then install the injectors into the delivery pipe and cylinder head.
   Make sure that the injectors rotate smoothly.
5) Tighten the delivery pipe bolts (4) and make sure that the injectors rotate smoothly.

   Tightening torque
   Fuel delivery pipe bolt (a): 11 N·m (1.1 kgf-m, 8.0 lbf-ft)

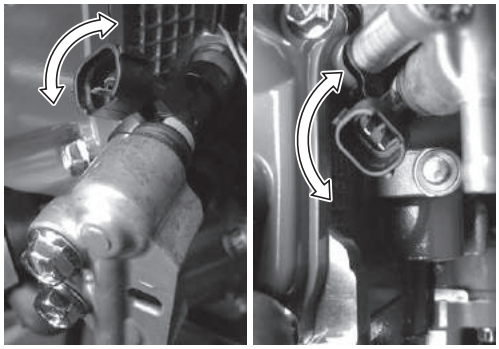

IDK111170043-01

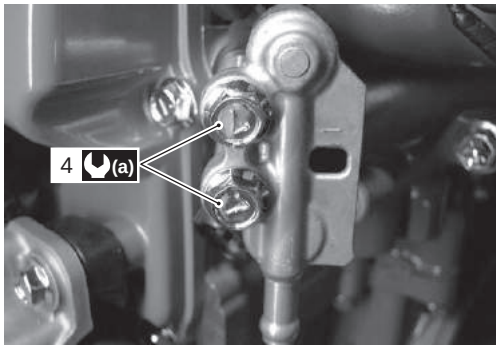

IDK111170044-01

6) Reconnect the fuel feed hose and fuel line securely.
7) Connect the lead wire connector to the injectors securely.

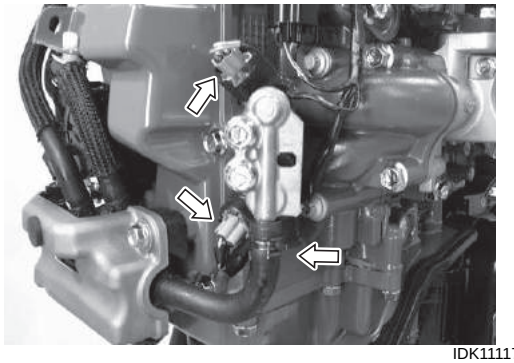

IDK111170045-02

8) Make sure the emergency stop switch lock plate is in place.
   Shift into "NEUTRAL" position.
9) Squeeze the fuel primer bulb until you feel resistance.
10) Pull the starter grip sharply several times.
11) Repeat step 9 and 10 to fill the high pressure fuel feed line with fuel.
    Check for fuel leaks around the fuel injector.

Low Pressure Fuel Pump Removal and Installation

CENDK1111706024

NOTICE

Disassembling the low pressure fuel pump can lead to troubles.

The low pressure fuel pump is a non-repairable component.
Do not attempt to disassemble the low pressure fuel pump.
It must be replaced as a complete unit if it is defective.

Removal

1) Remove both lower side covers.
   Refer to “Lower Side Cover Removal and Installation” in Section 2A (Page 2A-2).
2) Remove the bolts (1) and high pressure fuel pump guard (2).
3) Disconnect the lead wire connector (3) at high pressure fuel pump.

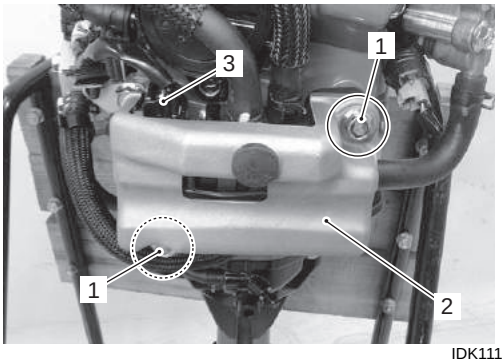

IDK111170046-02

4) Disconnect inlet hose (4) and outlet hose (5) from low pressure fuel pump (6).

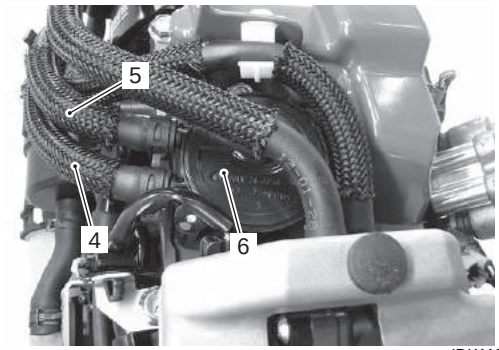

IDK111170059-01

5) Pull off the fuel return hose (7) from hose clamp (8). Remove the hose clamp (8) from cylinder head cover by releasing clamps’ lock.

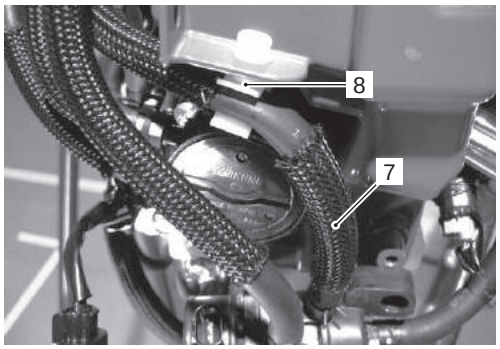

IDK111170048-01

6) Remove two bolts (10).
7) Remove fuel pump (11).

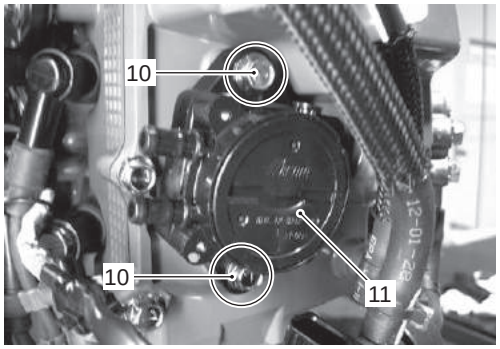

IDK111170049-01

Note position before removing O-ring (12).

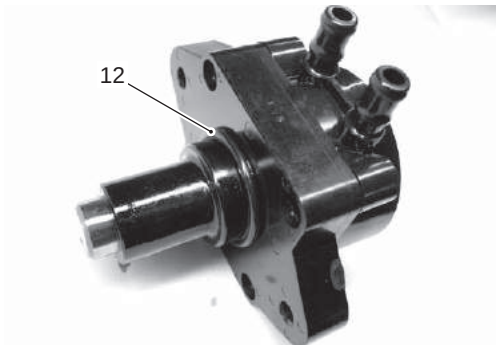

IDK111170050-01

Installation

Installation is in the reverse order of removal with special attention to the following steps.

NOTE

- **Before installing the fuel pump, rotate the crankshaft to bring No.1 (top cylinder) piston to Top Dead center on the compression stroke.**
- **Do not reuse O-ring once removed. Always use a new O-ring.**

Tightening torque
Low pressure fuel pump bolt (a): 10 N·m (1.0 kgf-m, 7.2 lbf-ft)

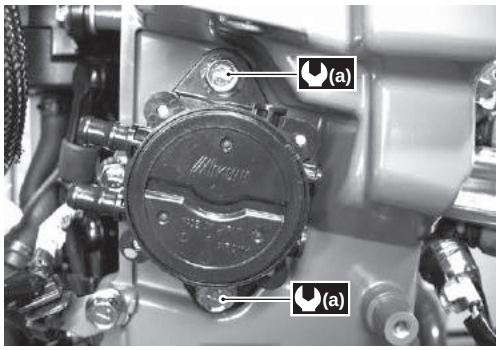

IDK111170051-01

Low Pressure Fuel Pump Inspection

CENDK1111706025

NOTICE

Disassembling the low pressure fuel pump can lead to troubles.

The low pressure fuel pump is a non-repairable component.
Do not attempt to disassemble the low pressure fuel pump.
It must be replaced as a complete unit if it is defective.

Fuel Pump Assembly

Inspect the fuel pump.
If leakage, cracks, damage or other abnormal condition is found, replace fuel pump assembly.

IDK111170052-01

IDK111170053-01

Fuel Tank Construction

CENDK1111706027

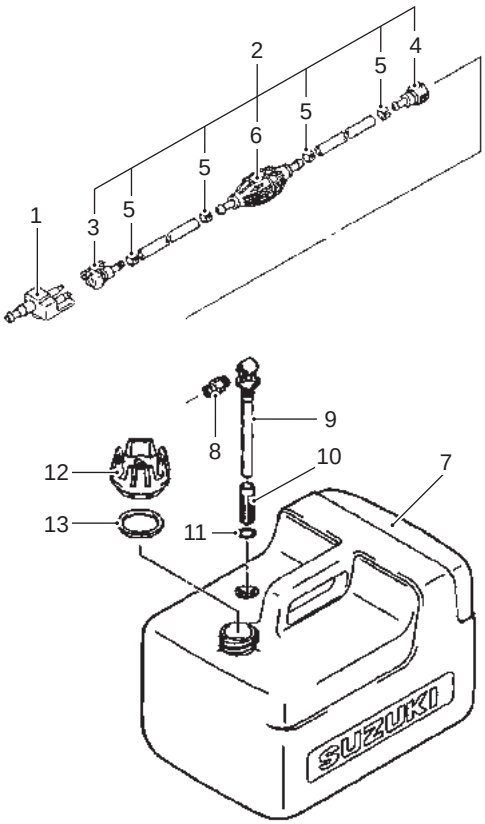

IAJ311170014-02

1. Fuel plug	5. Clip	9. Outlet	13. Fuel tank cap gasket
2. Fuel hose assembly	6. Primer bulb	10. Outlet filter	
3. Socket	7. Fuel tank body	11. O-ring	
4. Socket	8. Fuel connector plug	12. Fuel tank cap	

Fuel Tank Disassembly and Reassembly

CENDK1111706028

When disassembling or reassembling the fuel tank, refer to “Fuel Tank Construction” (Page 1G-24).

Fuel Tank Components Inspection

CENDK1111706029

Fuel Connector

Inspect the fuel connector and connector plug. If leakage, deterioration or other damage is found, replace the connector and/or plug.

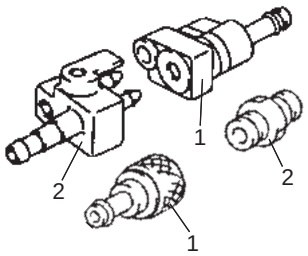

IAJ311170015-01

1. Connector	2. Connector plug

Fuel Primer Bulb

Inspect the fuel primer bulb.

If crack, leakage or deterioration is found, replace the bulb.

If the check valve function is defective, replace the bulb.

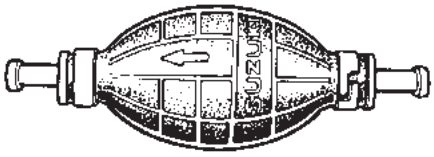

IAJ311170016-01

Fuel Hose
Inspect the fuel hoses. If cut, crack, leakage, abrasion, tear or deterioration is found, replace the hoses.

Fuel Tank Body
Inspect the fuel tank. If crack, leakage or deterioration is found, replace the tank.
If water or other contamination is found, drain and clean the tank.

IAJ311170017-01

Fuel Tank Cap
Check that the fuel tank vent opens and relieves internal tank pressure properly.
If vent is suspect, replace the tank cap.

IAJ311170018-01

Ignition System

General Description

Ignition System Description

CENDK1111801001

A digital CDI (condenser discharged ignition) system is employed on the DF15A/20A.
A condenser built in the ECM stores an electrical energy supplied from the ECM power source.
The electrical energy stored in the condenser is released to the ignition coil primary windings by the ignition timing signal calculated by the ECM, then a high surge voltage is generated in the ignition coil secondary windings and wakes ignition spark.

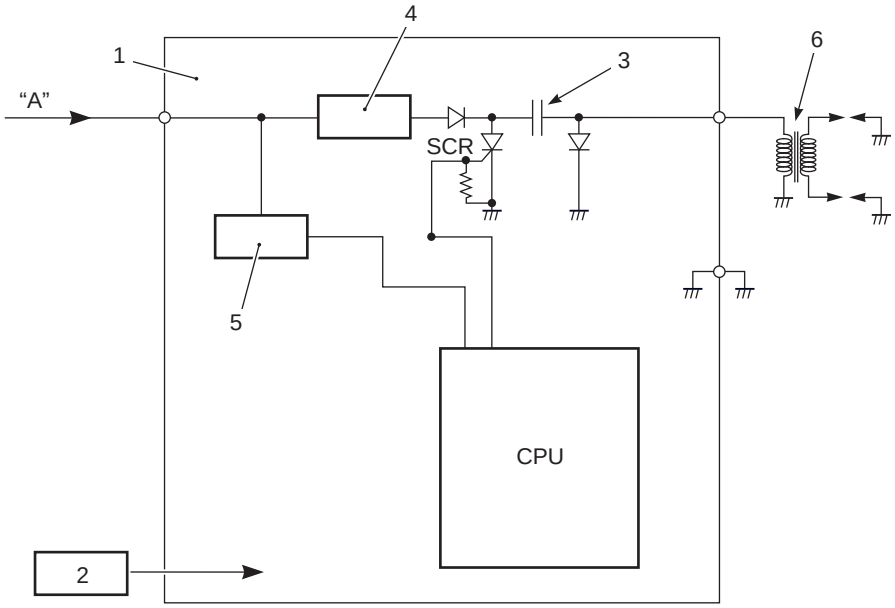

IDK111180002-04

1. ECM	4. Power circuit-1	"A": ECM power source (from power source coil)
2. Sensor/switch signal input	5. Power circuit-2	
3. Condenser	6. Ignition coil	

Ignition Control Description

CENDK1111801002

Sensors at specific points on the engine monitor current engine conditions and send signals to the ECM.
Based on these signals, the ECM determines the optimum ignition timing and releases voltage to the primary winding of the ignition coil.

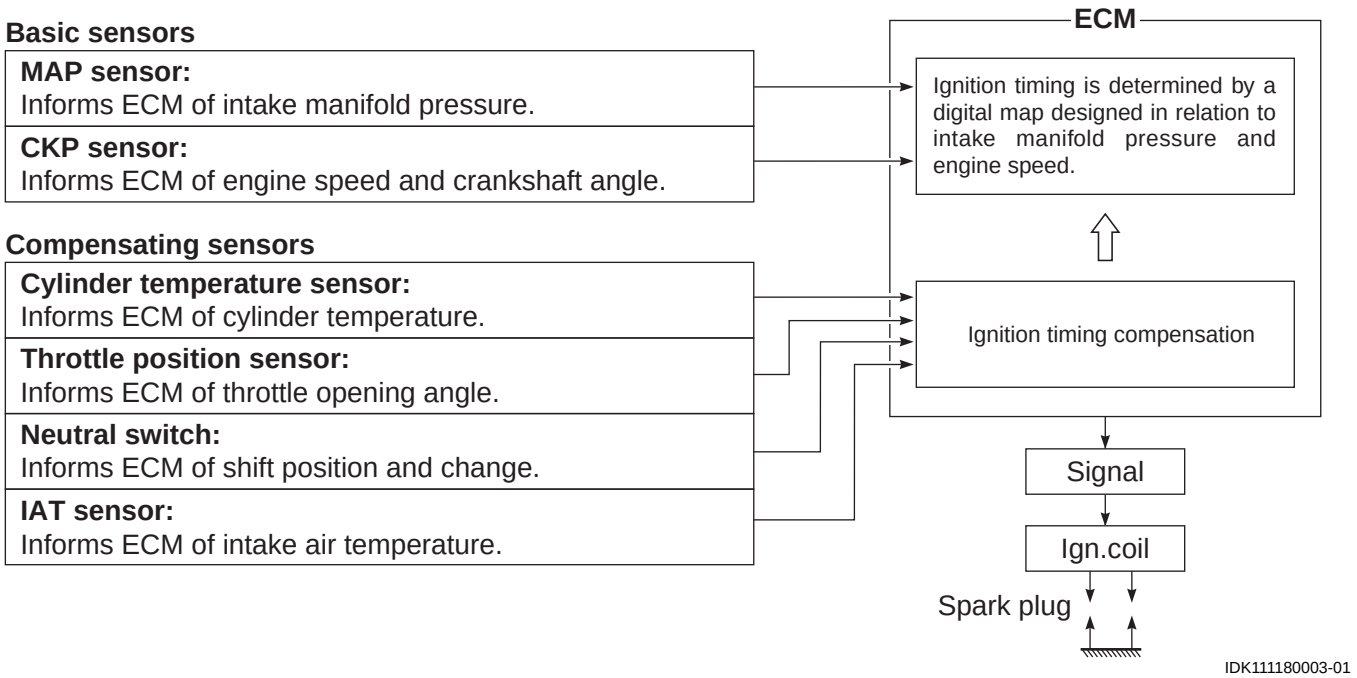

Ignition Specification

Ignition type	Digital CDI
Advance	Electronic microcomputer control
Ignition timing	5° BTDC – 10° BTDC (DF15A) 5° BTDC – 20° BTDC (DF20A)
Firing order	Simultaneous ignition

Ignition Timing Control Mode

- **When cranking**
  The ignition timing is fixed at 5° BTDC until the engine starts.
- **When operating (normal operation)**
  The ignition timing ranges between BTDC 5° – 10° (DF15A) or BTDC 5° – 20° (DF20A), depending on current engine operating conditions.

NOTE

The ignition timing remains at BTDC 5° when the shift lever is in neutral.

Component Location

Ignition System Components Location

CENDK1111803001

Refer to “Wiring Harness Routing Diagram” in Section 4A (Page 4A-3).

Diagnostic Information and Procedures

Ignition System Symptom Diagnosis

CENDK1111804001

Condition	Possible cause	Correction / Reference item
Engine cranks, but will not start or weak spark. (No spark)	Loose connection or disconnection of lead wire.	*Connect securely.*
	Faulty spark plug(s).	*Replace.*
	Faulty ignition coil.	*Replace.*
	Faulty CKP sensor.	*Replace.*
	Faulty CMP sensor.	*Replace.*
	Faulty power source coil.	*Replace.*
	Faulty ECM.	*Replace.*
	Faulty emergency stop switch.	*Replace.*
	Faulty neutral switch.	*Replace.*
Spark plug is wet or quickly becomes fouled with carbon.	Incorrect gasoline.	*Change.*
	Incorrect spark plug.	*Replace.*
Spark plug quickly become fouled with oil or carbon.	Worn piston ring.	*Replace.*
	Worn piston.	*Replace.*
	Worn cylinder.	*Replace.*
	Excessive valve stem to valve guide clearance.	*Replace.*
	Worn valve stem seal.	*Replace.*
Spark plug electrodes overheat or burn.	Incorrect spark plug.	*Change.*
	Overheated engine.	*Tune-up.*
	Loose spark plug.	*Tighten.*

Ignition System Troubleshooting

CENDK1111804002

Perform the following ignition system tests when the engine is hard to start in order to determine if the cause is in the ignition or another system.

Step 1

Check the ignition system connector for poor connections.

Is there connection in the ignition system connectors?

Yes Go to step 2.

No Poor connection of connectors.

Step 2

Check spark condition.

Is result OK?

Yes Go to step 13.

No No or weak sparks. Go to step 3.

Step 3

Check if the spark plug is in good condition.

Is result OK?

Yes Go to step 4.

No Replace spark plug with a new one.

Step 4

- Disconnect the emergency stop switch lead wire connector.
- Check spark condition at engine cranking.

Is result OK?

Yes Check and/or replace emergency stop switch.

No Go to step 5.

Step 5

Check neutral switch condition.
Refer to “Neutral Switch Inspection” in Section 1I (Page 1I-15).

Is result OK?

Yes — Go to step 6.

No — Faulty Neutral switch.

Step 6

Measure the ignition coil primary peak voltage.
Refer to “Ignition Coil Primary Peak Voltage Inspection” (Page 1H-7).

Is the peak voltage OK?

Yes — Poor connection of the spark plug.

No — Go to step 7.

Step 7

Check ignition coil resistance.
Refer to “Ignition Coil Inspection” (Page 1H-6).

Is result OK?

Yes — Go to step 8.

No — Faulty ignition coil.

Step 8

- Check the spark plug cap for any evidence of the high-tension leak.
- Check spark plug cap resistance.

Are result OK?

Yes — Go to step 9.

No — Faulty spark plug cap.

Step 9

Check CKP sensor resistance.
Refer to “CKP Sensor Inspection” (Page 1H-7).

Is result OK?

Yes — Go to step 10.

No
- Check air gap between CKP sensor and flywheel reluctor bars.
- Adjust CKP sensor air gap.
- Replace CKP sensor or flywheel.

Step 10

Check CMP sensor.
Refer to “CMP Sensor Inspection” in Section 1C (Page 1C-9).

Is result OK?

Yes — Go to step 11.

No
- Faulty CMP sensor.
- Check CMP sensor trigger vane.
- Replace CMP sensor or camshaft pulley.

Step 11

Check ECM power source.

- Manual starter model:
  a. Check ECM power source coil resistance.
     Refer to “ECM Power Source Coil Inspection” (Page 1H-7).
- Electric starter model:
  a. Check battery charge coil resistance.
     Refer to “Battery Charge Coil Inspection” in Section 1K (Page 1K-15).
  b. Check rectifier / regulator.
     Refer to “Rectifier / Regulator Inspection” in Section 1K (Page 1K-16).

Is result OK?

Yes — Go to step 12.

No
- Faulty power source coil.
- Faulty battery charge coil.
- Faulty rectifier / regulator.

Step 12

Substitute a known-good ECM then repeat step 2.

Is check result of step 2 satisfactory?

Yes
- Faulty ECM.
- Replace ECM.

No — Open or short circuit in wire harness.

Step 13

Check the ignition timing by using timing light. (BTDC 5° at 1 000 r/min)

Is result OK?

Yes — System is in good condition.

No — Faulty ECM.

Service Instructions

Spark Plug Removal and Installation

CENDK1111806001

Refer to “Spark Plug Removal and Installation” in Section 0B (Page 0B-7).

Spark Plug Inspection

CENDK1111806002

Refer to “Spark Plug Inspection and Cleaning” in Section 0B (Page 0B-7).

Ignition Coil Removal and Installation

CENDK1111806003

Removal

1) Remove PORT lower side cover.
   Refer to “Lower Side Cover Removal and Installation” in Section 2A (Page 2A-2).
2) Remove the fuel filter (1) from filter bracket.

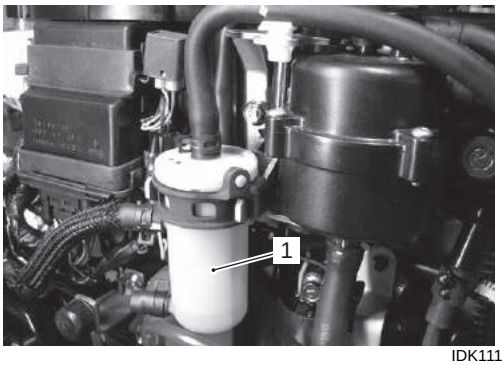

IDK111180004-01

3) Remove the bolts (3) securing fuel cooler (2).

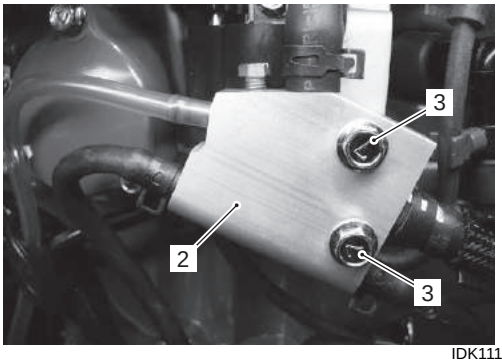

IDK111180005-01

4) Remove the bolt (4) securing fuel vapor separator (5), then remove separator from bracket.

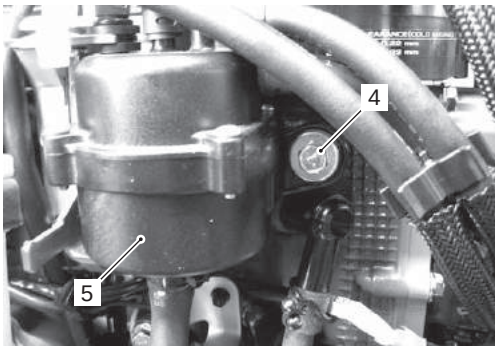

IDK111180006-01

5) Disconnect the ignition coil lead wire connector (6).
6) Remove the bolts (7) and ignition coil (8).

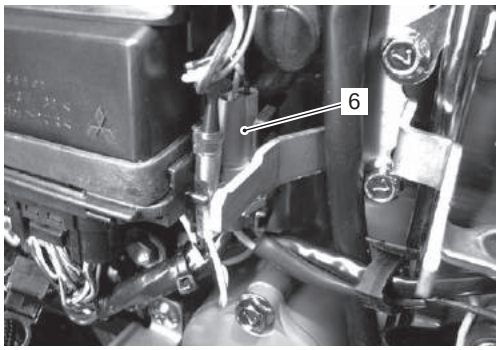

IDK111180008-01

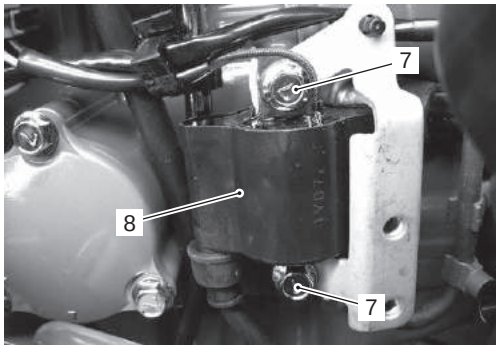

IDK111180007-02

Installation

1) Install the ignition coil (1), then secure the ignition coil with its mounting bolts.
2) Connect ignition coil lead wire connector.

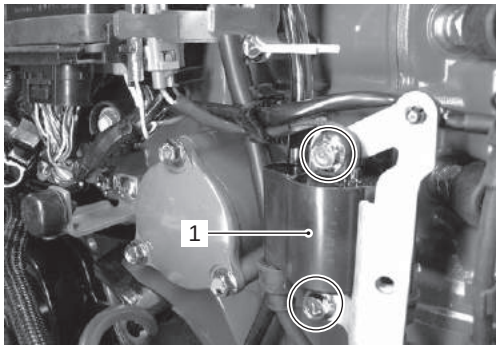

IDK111180009-01

3) Install the fuel vapor separator (2), then secure separator with its mounting bolt.

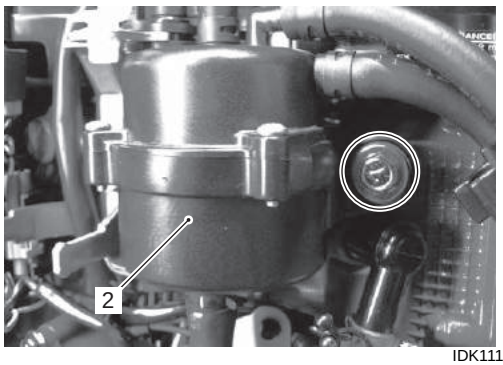

IDK111180010-01

4) Install the fuel cooler (3), then secure fuel cooler with its mounting bolts.

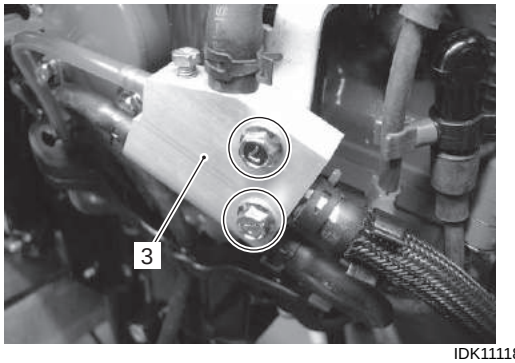

IDK111180011-01

5) Install fuel filter (4) to filter bracket.

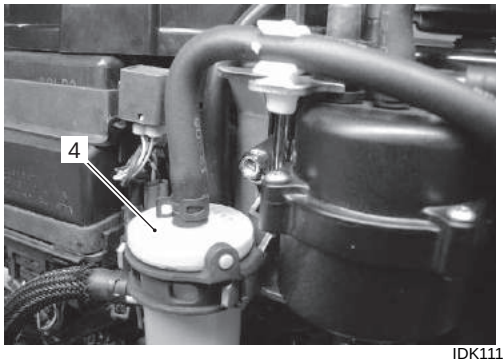

IDK111180012-01

6) Install PORT lower side cover.
   Refer to “Lower Side Cover Removal and Installation” in Section 2A (Page 2A-2).

Ignition Coil Inspection

CENDK1111806004

Special tool
TOOL (A): 09930–99320 (Digital tester)

Tester knob indication
Resistance (Ω)

Primary Coil Side

1) Remove PORT lower side cover.
   Refer to “Lower Side Cover Removal and Installation” in Section 2A (Page 2A-2).
2) Disconnect the ignition coil lead wire connector.
3) Connect the tester probe to the coil lead wires as shown.

   Primary coil resistance
   Standard: 0.08 – 0.11 Ω

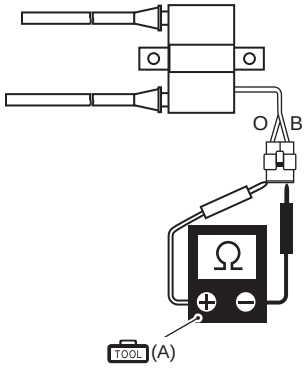

IAJ311180003-02

4) If measurement is out of specification, replace the ignition coil.
5) Install PORT lower side cover.
   Refer to “Lower Side Cover Removal and Installation” in Section 2A (Page 2A-2).

Secondary Coil Side

1) Remove the spark plug caps from the high-tension cord.
2) Connect the tester probe to the high-tension cords as shown.

   Secondary coil resistance
   Standard: 3.5 – 4.7 kΩ

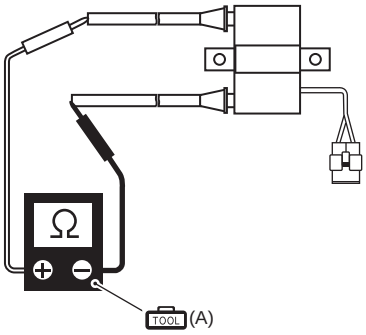

IAJ311180004-02

   If measurement is out of specification, replace the ignition coil.

Spark Plug Cap Inspection

CENDK1111806005

Measure the spark plug cap resistance in the following procedure.

Special tool

TOOL (A): 09930–99320 (Digital tester)

Tester knob indication
Resistance (Ω)

1) Remove the spark plug cap from high-tension cord.
2) Connect the tester probe to spark plug cap as shown.

   Spark plug cap resistance
   Standard: 4 – 6 kΩ

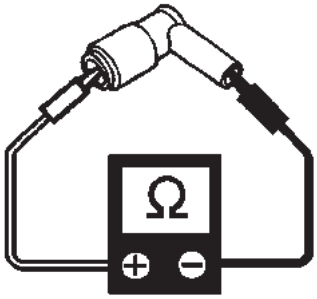

IAJ311180005-01

3) If measurement is out of specification, replace the spark plug cap.
4) Connect the spark plug cap to high-tension cord.

Ignition Coil Primary Peak Voltage Inspection

CENDK1111806006

Special tool

TOOL (A): 09930–88940 (26-pin test cord)
CD-77 : Stevens peak reading voltmeter CD-77

Tester knob indication
NEG 500

1) Disconnect wire harness connector from ECM.
2) Connect the 26 pin test cord between ECM and wire harness as shown in figure.

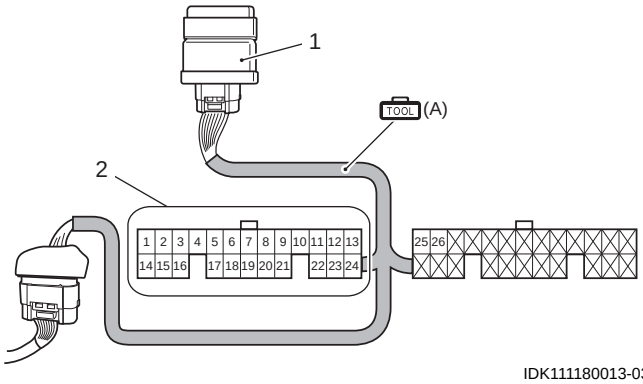

IDK111180013-03

1. ECM	2. White connector

3) Connect the tester probe to the test cord lead wires as shown.

Tester probe connection	
Red (+)	**Black (–)**
No.1 terminal	No.14 terminal (or engine body ground)

26-pin test cord (White connector)

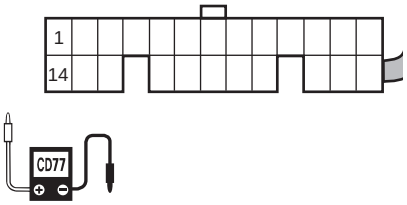

IDK111180001-04

4) Remove all spark plugs.
5) Crank with the recoil starter, then measure voltage.

   Ignition coil primary peak voltage (for electric starter models)
   Standard: 110 V or over

   Ignition coil primary peak voltage (for manual starter models)
   Standard: 100 V or over

6) If measurement is out of specification, inspect the related parts.
   Refer to “Ignition System Symptom Diagnosis” (Page 1H-3) and “Ignition System Troubleshooting” (Page 1H-3).

CKP Sensor Inspection

CENDK1111806011

Refer to “CKP Sensor Peak Voltage Inspection” in Section 1C (Page 1C-6) and “Resistance Check” in Section 1C (Page 1C-5).

ECM Power Source Coil Inspection

CENDK1111806008

Refer to “ECM Power Source Coil Peak Voltage Inspection” in Section 1C (Page 1C-6) and “Resistance Check” in Section 1C (Page 1C-5).

Emergency and Engine Stop Switch Inspection

CENDK1111806009

Refer to “Emergency and Engine Stop Switch Inspection” in Section 1C (Page 1C-13).

Starting System

General Description

Electric Starter System Description

CENDK1111901001

The starting circuit consists of the battery, starting motor, starter button, neutral switch, starter relay and related electrical wiring.
These components are connected electrically as shown in the figure below.
In the circuit shown in the figure below, the magnetic switch coils and starter relay coil are magnetized when the starter button is closed (Starter button depressed).
The resulting plunger and pinion shift lever movement causes the pinion to engage the engine flywheel gear, the magnetic switch main contacts to close, and engine cranking to take place.
When the engine starts, the pinion over-running clutch protects the armature from excessive speed until the starter button is opened, at which time the torsion spring causes the pinion to disengage.

Starting system circuit for tiller handle model

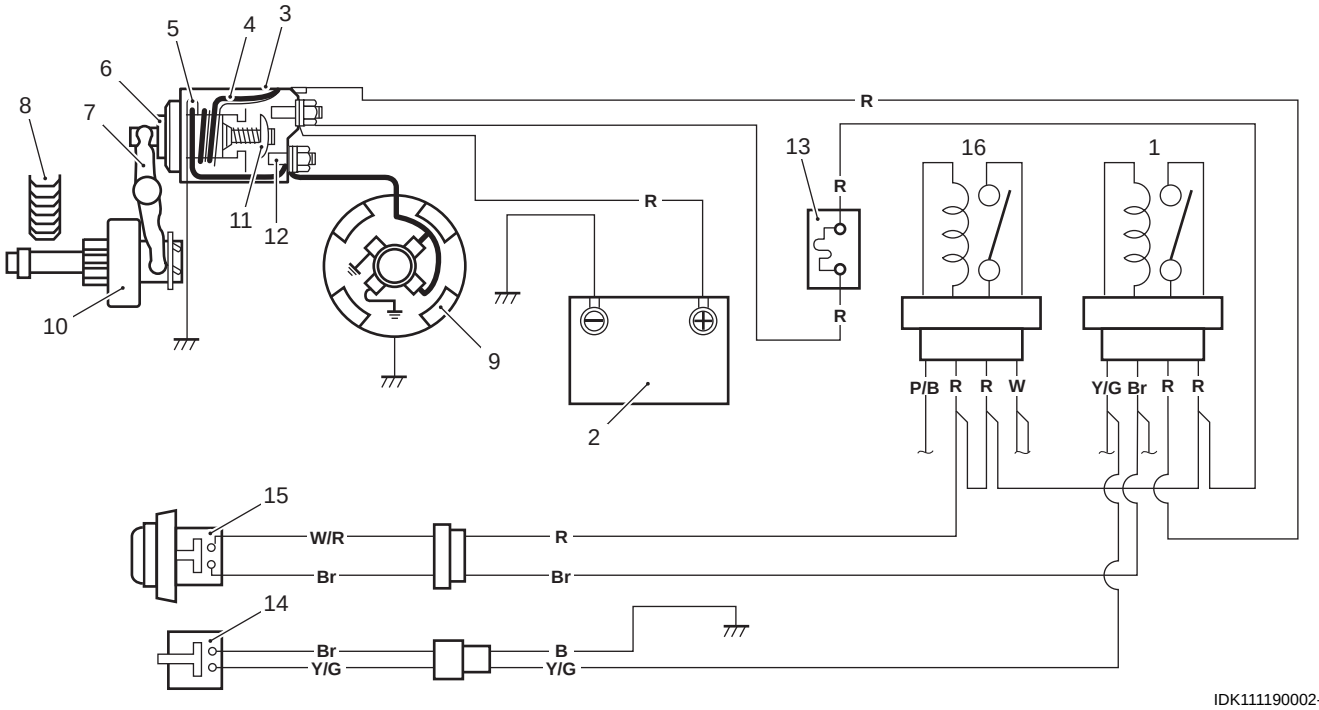

IDK111190002-03

1. Starter relay	5. Hold-in coil	9. Starter motor	13. 30 A Fuse
2. Battery	6. Plunger	10. Pinion and over-running clutch	14. Neutral switch
3. Magnetic switch	7. Shift lever	11. Movable contact	15. Starter button
4. Pull-in coil	8. Ring gear	12. Stationary contact	16. Battery relay

Start-In-Gear Protection System Description

CENDK1111901002

The neutral switch opens the starter circuit to prevent accidental engaging of starter motor whenever the shift is set in forward or reverse.
The switch is operated by clutch lever shaft through the clutch notch lever.

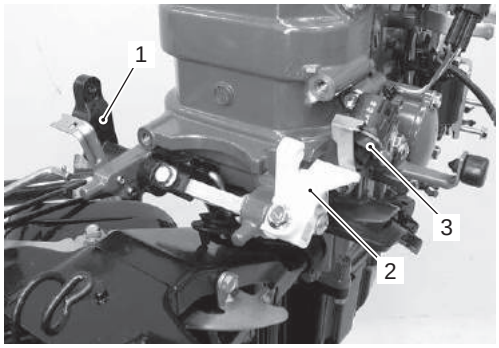

IDK111190009-01

1. Clutch lever shaft	3. Neutral switch
2. Clutch notch lever	

Component Location

Starting System Components Location

CENDK1111903001

Refer to “Wiring Harness Routing Diagram” in Section 4A (Page 4A-3).

Diagnostic Information and Procedures

Starter System Symptom Diagnosis

CENDK1111904001

Condition	Possible cause	Correction / Reference item
Motor not running. (No operating sound of magnetic switch.)	Poor or broken battery connection.	*Replace.*
	Loose or corroded battery connection.	*Repair or retighten.*
	Weak or shorted battery.	*Replace or recharge battery.*
	Defective neutral switch.	*Neutral switch inspection. Replace.*
	Fuse blown.	*Replace.*
	Defective starter button.	*Starter button inspection. Replace.*
	Open circuit between starter button and magnetic switch.	*Repair.*
	Lead wire disconnected or loose.	*Retighten.*
	Poor contacting action of starter button and magnetic switch.	*Replace. Starter button inspection. Magnetic switch inspection.*
	Defective starter motor relay.	*Starter motor relay inspection.*
	Open circuit in pull-in coil.	*Replace magnetic switch. Magnetic switch inspection.*
	Brushes are seating poorly or worn.	*Repair or replace. Brushes inspection.*
Motor not running. (Operating sound of magnetic switch heard.)	Weak or shorted battery.	*Replace or recharge battery.*
	Battery voltage too low due to battery deterioration.	*Replace battery.*
	Loose or corroded battery connection.	*Repair or retighten.*
	Burnt main contact point, or poor contacting action of magnetic switch.	*Replace magnetic switch. Magnetic switch inspection.*
	Brushes are seating poorly or worn.	*Replace or repair. Brushes inspection.*
	Weakened brush spring.	*Replace.*
	Burnt commutator.	*Replace armature. Commutator inspection.*
	Shorted or open winding in armature.	*Replace. Armature inspection.*
	Excessive friction in engine.	*Repair.*
Starter motor running but too slow. (Low torque) (If battery and wiring are satisfactory, inspect starting motor.)	Insufficient contact of magnetic switch main contacts.	*Replace magnetic switch. Magnetic switch inspection.*
	Shorted armature.	*Replace. Armature inspection.*
	Dirty or corroded commutator.	*Repair commutator or replace armature. Armature inspection.*
	Worn brushes.	*Replace brushes.*
	Weakened brush spring.	*Replace.*
Starter motor running, but not cranking engine.	Worn pinion tip.	*Replace over-running clutch.*
	Poor sliding of over-running clutch.	*Repair.*
	Over-running clutch slipping.	*Replace over-running clutch.*
	Worn teeth of ring gear.	*Replace flywheel.*
Starter motor does not stop running.	Broken contact point of magnetic switch.	*Replace magnetic switch.*
	Short-circuit magnetic switch coil.	*Replace magnetic switch.*

Starter System Troubleshooting

CENDK1111904002

⚠ CAUTION

Failure to take proper precaution when starter system troubleshooting may result in personal injury and/or damage to electronic components.

If any abnormality is found, immediately disconnect battery cables from the battery.

NOTE

Before troubleshooting the electric starter system, make sure of the following:

- **Battery is fully charged.**
- **All cables/wires are securely connected.**
- **Shift is in “Neutral” position.**
- **Fuse is not blown.**

Circuit check schematic

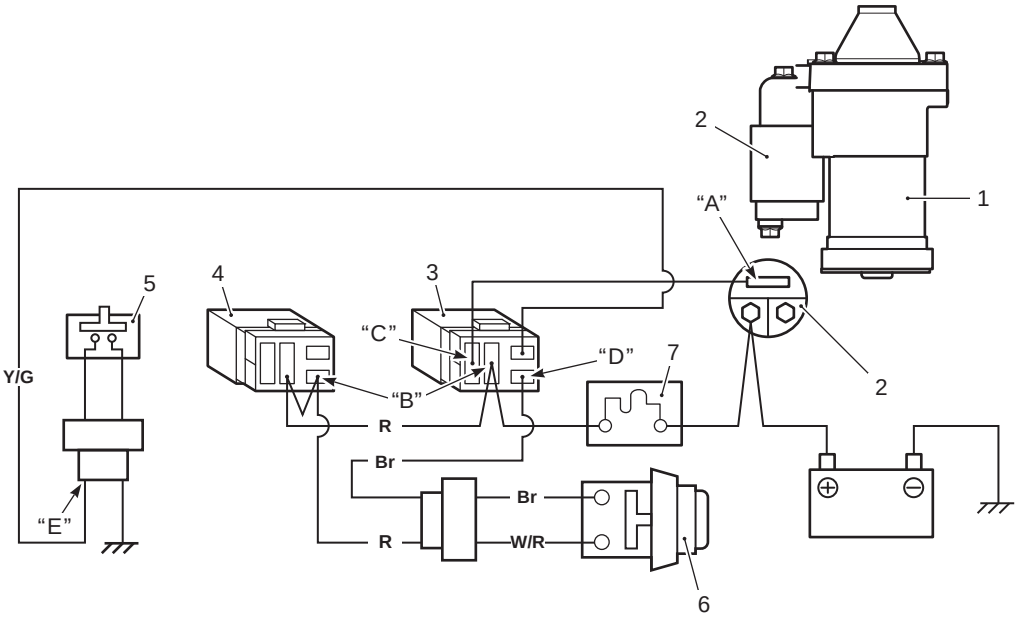

IDK111190003-03

1. Starter motor	4. Battery relay	7. Fuse
2. Starter motor magnetic switch	5. Neutral switch	
3. Starter motor relay	6. Starter button	

Starter Motor will Not Run

Step 1

1) Remove lower side cover.
   Refer to “Lower Side Cover Removal and Installation” in Section 2A (Page 2A-2).
2) Disconnect lead wire connector “A” from magnetic switch “S” terminal.
3) Measure voltage between lead wire connector “A” and body ground with starter button depressed.

Is voltage 12 V (battery voltage)?

Yes
- Faulty starter motor.
- Poor wire connection.
- Substitute a known-good motor and recheck.

No Go to step 2.

Step 2

1) Disconnect lead wire connector from ECM, then remove ECM.
2) Pull starter motor relay out.
3) Check for relay “click” sound when starter button depressed.

Is a “click” sound heard?

Yes Go to step 3.

No Go to step 5.

Step 3

1) Measure voltage between “R” lead wire terminal “B” and body ground.

Is voltage 12 V (battery voltage)?

Yes Go to step 4.

No Open “R” lead wire circuit between magnetic switch and terminal “B”.

Step 4

1) Measure voltage between “R” lead wire terminal “C” and body ground with starter button depressed.

Is voltage 12 V (battery voltage)?

Yes Go to step 5.

No Poor contacting action of starter relay.

Step 5

1) Measure voltage between “Br” lead wire terminal “D” and body ground with starter button depressed.

Is voltage 12 V (battery voltage)?

Yes Go to step 6.

No
- Faulty starter button.
- Open “R” lead wire circuit between starter motor relay and starter button.

Step 6

1) Disconnect neutral switch lead wire connector.
2) Measure voltage between “Y/G” lead wire terminal “E” of neutral switch connector (wire harness side) and body ground with starter button depressed.

Is voltage 12 V (battery voltage)?

Yes Go to step 7.

No
- Faulty starter motor relay.
- Open “Y/G” lead wire circuit between starter motor relay and neutral switch.

Step 7

1) Inspect neutral switch.
   Refer to “Neutral Switch Inspection” (Page 1I-15).

Is result OK?

Yes Intermittent trouble or poor harness lead wire connection.

No
- Faulty neutral switch.
- Poor switch lead wire connection.

Service Instructions

Starter Motor Removal and Installation

CENDK1111906001

Removal

NOTICE

If the 12 V electrical system is shorted while servicing the starter motor, the engine electrical circuits could be damaged seriously.

Prior to removing starter motor, disconnect the battery cable at the battery.

1) Remove the lower side cover.
   Refer to “Lower Side Cover Removal and Installation” in Section 2A (Page 2A-2).
2) Remove the recoil starter.
   Refer to “Recoil Starter Removal and Installation” in Section 1J (Page 1J-3).
3) Remove the flywheel (1).
   Refer to “Flywheel Removal and Installation” in Section 1K (Page 1K-4).

   Special tool
   TOOL (A): 09930–39520 (Flywheel holder)
   TOOL (B): 09930–39210 (Flywheel remover bolt)
   TOOL (C): 09930–39411 (Flywheel remover)

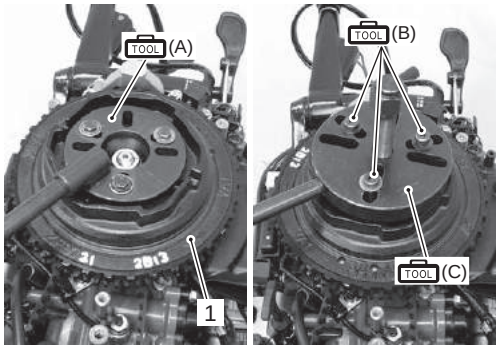

IDK111190010-01

4) Remove nut (2) and positive (+) battery cable (3), positive (Red) cable (4) from the magnetic switch (5) of starter motor.
   Disconnect the red lead wire (6) from “S” terminal of starter magnetic switch.

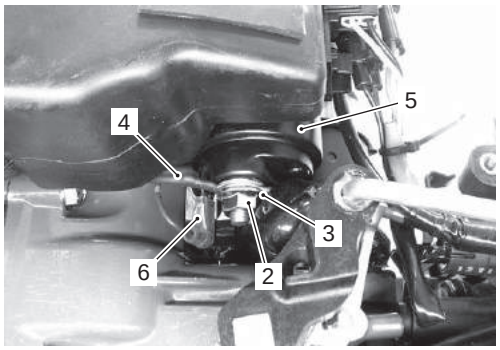

IDK111190011-02

5) Remove the two bolts securing rectifier and regulator (7).

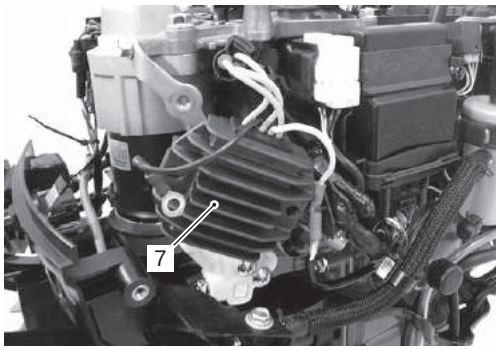

IDK111190012-01

6) Remove the bolt (8) securing rectifier bracket.
   Loosen the bolt (9) securing starter motor band (10).

NOTE

Complete removal of the starter motor band bolts is not required.

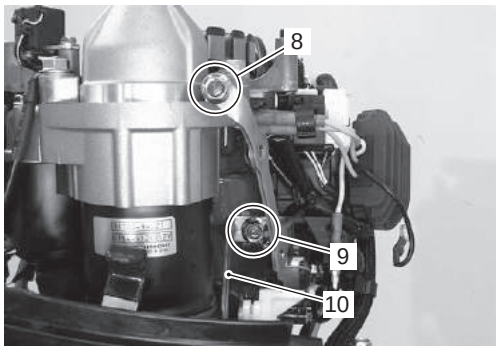

IDK111190013-01

7) Remove the four bolts (11) securing stator base.
8) Remove the two bolts (12) securing starter motor.

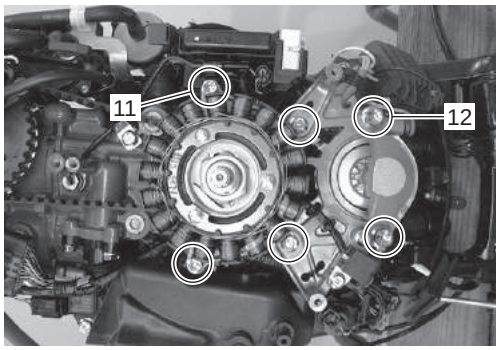

IDK111190014-01

9) Lift up the stator base, then remove the starter motor (13).

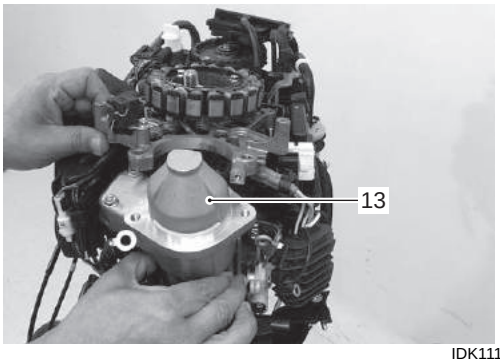

IDK111190015-01

Installation

Installation is in the reverse order of removal with special attention to the following steps.

- Install the starter motor and tighten starter motor mounting bolts securely.

  Tightening torque
  Starter motor mounting bolt (a): 23 N·m (2.3 kgf-m, 16.5 lbf-ft)

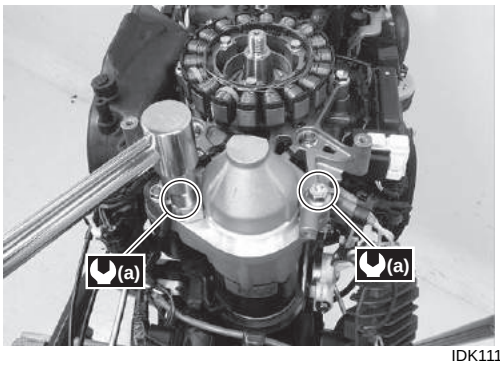

IDK111190016-01

- Install flywheel and tighten flywheel nut to specified torque.
  Refer to “Flywheel Removal and Installation” in Section 1K (Page 1K-4).

  Tightening torque
  Flywheel nut: 90 N·m (9.0 kgf-m, 65 lbf-ft)

- Check to ensure that all removed parts are back in place.

Starter Motor Test

CENDK1111906002

⚠ CAUTION

Sparks resulting from short circuit between the positive (+) and negative (–) terminals during connections to the battery could cause a burn.

Be careful not to short-circuit the positive (+) and negative (–) cables and connect them only to the correct terminals.

⚠ CAUTION

If the cable used for the test is not adequately thick, the cable may become extremely hot due to large current flowing through it and you could get burned.

Be sure to connect the battery and the starting motor with a lead wire of the same size as original equipment.

NOTICE

If battery power is applied too long in any of the following tests, the coil of the magnetic switch may burn.

Each test must be completed within 3 – 5 seconds to avoid burning of the coil.

Pull-In / Hold-In Test

NOTE

Before testing, disconnect the brush lead from terminal “M”.

Connect the battery to the magnetic switch as shown in the figure.

- Check that the plunger and pinion (over-running clutch) move outward.
  If the plunger and pinion don’t move, replace the magnetic switch.

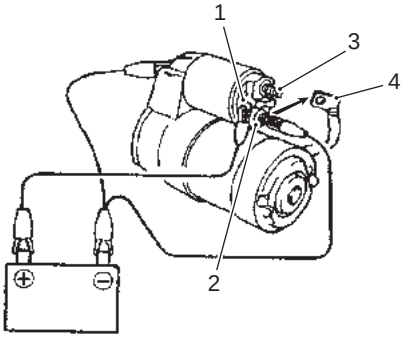

I9J011190002-02

1. Terminal “S”	3. Terminal “B”
2. Terminal “M”	4. Brush lead

- While connected as above with the plunger out, disconnect the negative lead from terminal “M”. Check that the plunger and pinion remain out. If the plunger and pinion return inward, replace the magnetic switch.

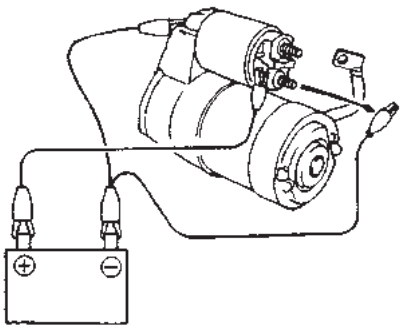

I9J011190003-01

Plunger and Pinion Return Test

Disconnect the negative lead from the switch / motor body.
Check that the plunger and pinion return inward.
If the plunger and pinion don't return inward, replace the magnetic switch.

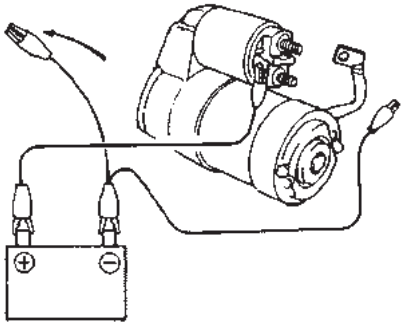

I9J011190004-01

No-Load Performance Test

NOTE

Before performing the following test, secure the starter motor to the test bench.

1) Connect a battery and ammeter to the starter motor as shown.
2) Check that the starter rotates smoothly and steadily with the pinion moving out. Check that the ammeter indicates the specified current.

Specified current (No-load performance test)
Within 90 A at 11 V

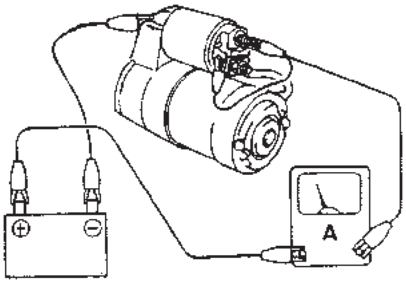

I9J011190005-01

Starter Motor Components

CENDK1111906003

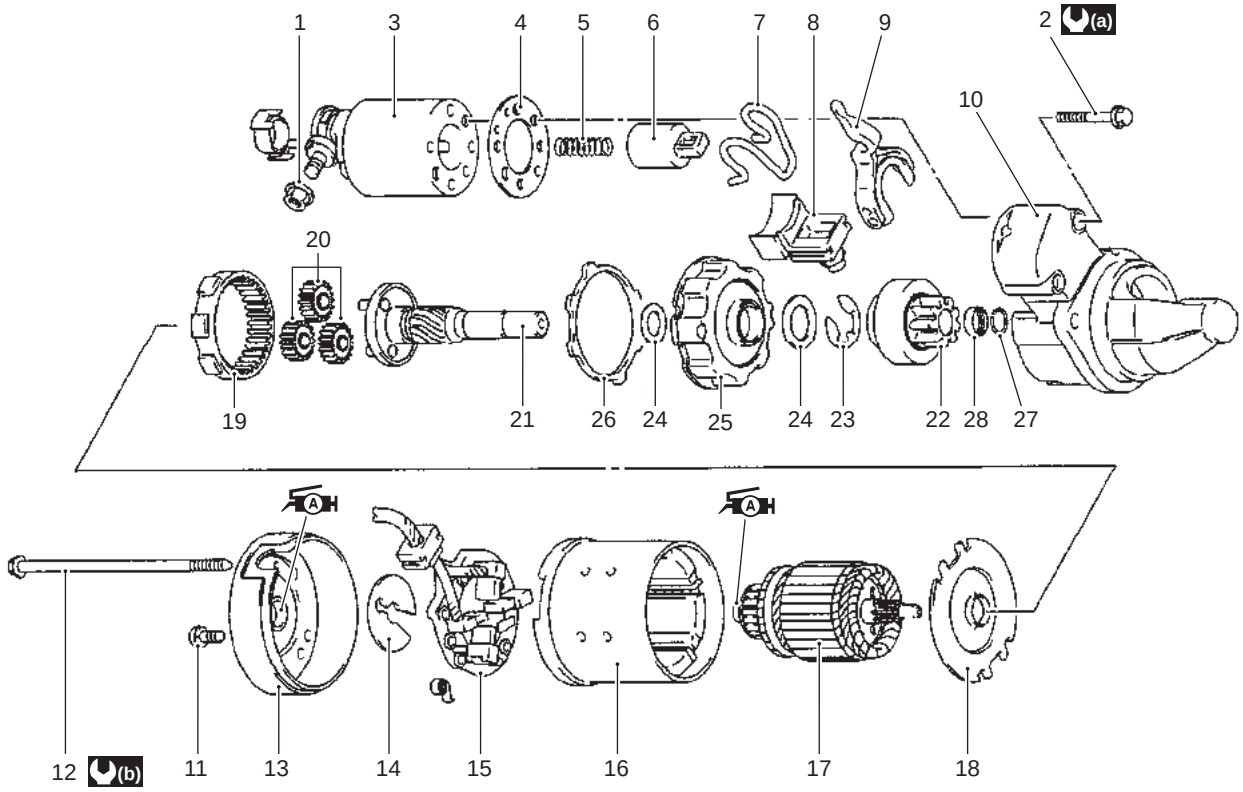

I9J011190006-02

1. Nut	9. Shift lever	17. Armature	25. Center bracket
2. Bolt	10. Front housing	18. Center cover plate	26. Rubber ring
3. Magnetic switch	11. Screw	19. Internal gear	27. Stopper ring
4. Gasket	12. Through bolt	20. Planetary gear	28. Pinion stopper
5. Spring	13. Rear cover	21. Pinion shaft	(a) : 7 N·m (0.7 kgf-m, 5.1 lbf-ft)
6. Plunger	14. Thrust washer	22. Pinion	(b) : 5.5 N·m (0.55 kgf-m, 4.0 lbf-ft)
7. Torsion spring	15. Brush holder	23. E-ring	A : Apply grease.
8. Rubber packing	16. Yoke	24. Washer	

Starter Motor Disassembly and Assembly

CENDK1111906004

Disassembly

When overhauling the starting motor, it is recommended that the component parts be cleaned thoroughly. However, the yoke assembly, armature coil, over-running clutch assembly, magnetic switch assembly and rubber or plastic parts should not be washed in a degreasing tank or with a grease dissolving solvent. These parts should be cleaned with compressed air or wiped with clean cloth.

NOTE

Before disassembling the starting motor, be sure to put match marks at three locations ("A", "B" and "C") as shown in the figure at right to avoid any possible component alignment mistakes.

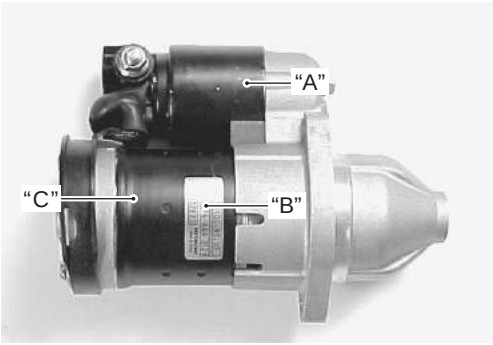

I9J011190007-01

1) Remove nut (1) from the magnetic switch, then disconnect the connecting wire (2).
2) Remove two bolts (3) securing the magnetic switch.

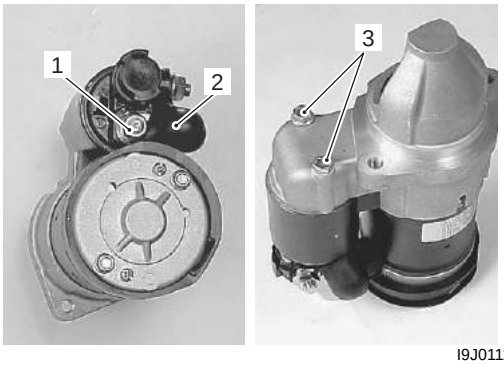

I9J011190008-01

3) Remove the magnetic switch (4).

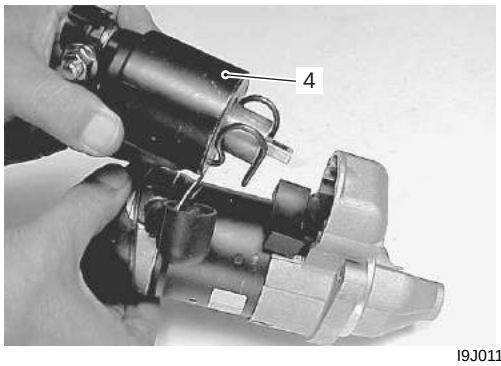

I9J011190009-01

4) Remove screws (5), long through bolts (6) and the rear cover (7).

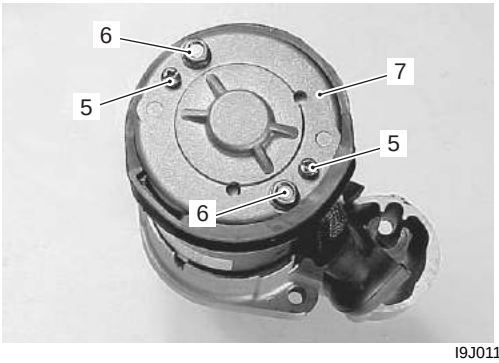

I9J011190010-01

5) Remove thrust washer (8) with a screwdriver.

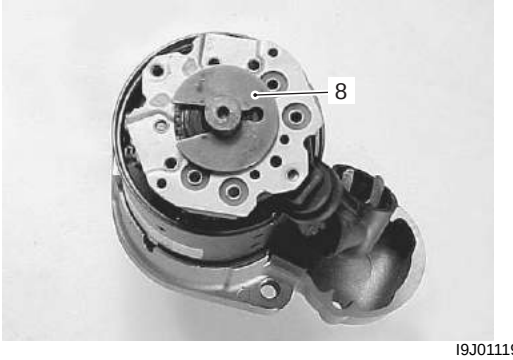

I9J011190011-01

6) Pull the brush spring (9) up to separate the brush from the surface of the commutator, then remove the brush holder (10).

I9J011190012-01

7) Remove the yoke (11) and armature (12).

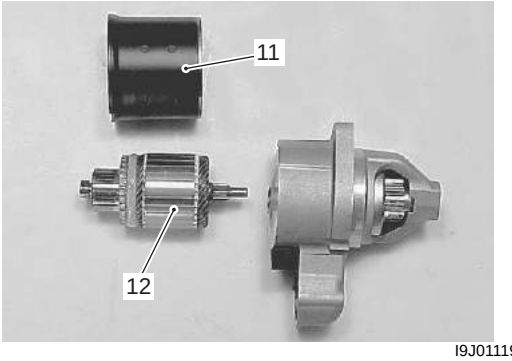

I9J011190013-01

8) Remove the center cover plate (13).
9) Remove the planetary gears (14) and internal gear (15).

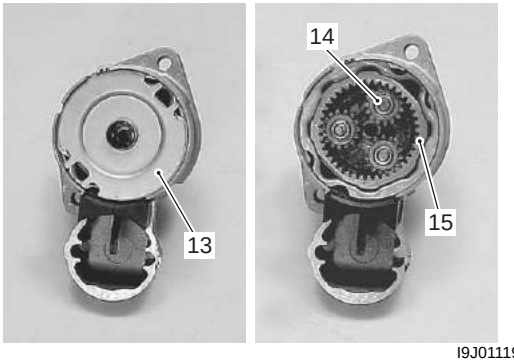

I9J011190014-01

10) Remove the center bracket (16) (with shift lever (18), pinion (19) and pinion shaft (20)) from front housing (17).

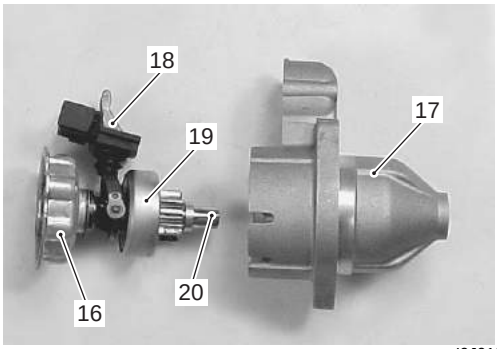

I9J011190015-02

11) Remove the shift lever (18).

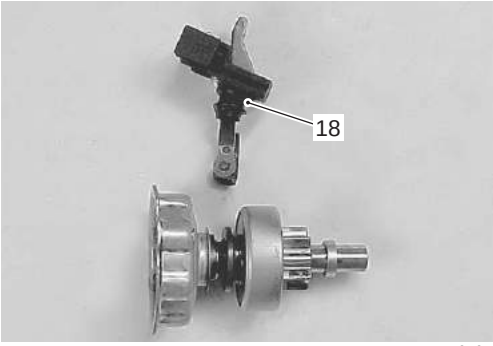

I9J011190016-01

⚠ WARNING

Failure to take proper precautions when removing stopper ring can cause personal injury.

Wear safety glasses when disassembling and assembling the stopper ring.

NOTE

Using a screw-driver, pry off the stopper ring.

12) Push the pinion stopper (21) down, then remove the stopper ring (22). Remove the pinion stopper and pinion (19).

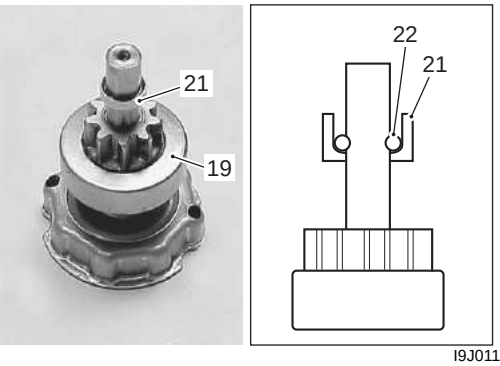

I9J011190017-01

13) Remove the E-ring (23).

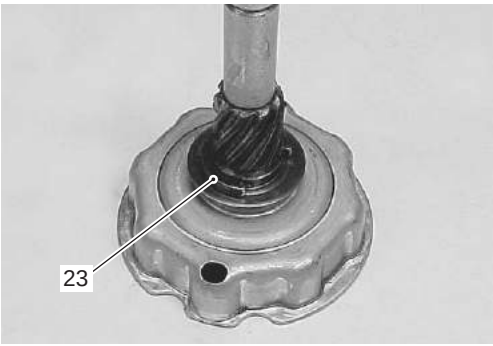

I9J011190019-01

14) Remove the pinion shaft (20), washers (24) and rubber ring (25) from the center bracket.

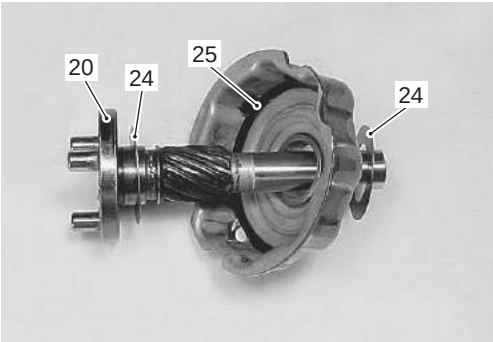

I9J011190020-01

Assembly

Assembly is in the reverse order of disassembly with special attention to the following steps.

Reassemble the starter motor, refer to “Starter Motor Components” (Page 1I-8).

- When installing the armature, use care to avoid breaking the brushes.

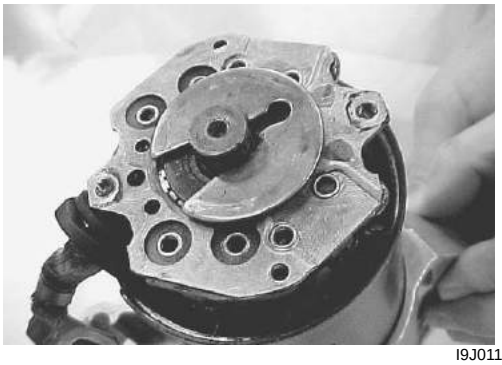

I9J011190021-01

Starter Motor Components Inspection and Servicing

CENDK1111906005

Armature and Commutator

- Inspect the commutator surface. If surface is gummy or dirty, clean with # 500 grit emery paper (1).

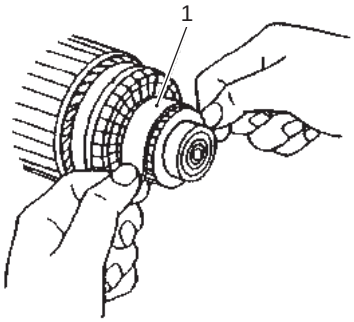

I9J011190022-01

- Measure the commutator outside diameter. If the measurement exceeds the service limit, replace the armature.

Special tool
TOOL (A): 09900–20101 (Vernier calipers (150 mm))

Commutator outside diameter
Standard: 29.0 mm (1.14 in.)
Service limit: 28.0 mm (1.10 in.)

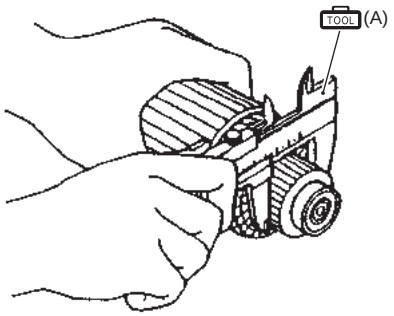

I9J011190023-01

- Check that the mica (insulator) between the segments is undercut to specified depth.
  If the measurement exceeds the service limit, cut to the specified depth.

⚠ WARNING

Failure to following proper precautions during use of the compressed air may cause severe personal injury.

Wear safety glasses when using compressed air.

NOTE

Remove all particles of mica and metal using compressed air.

Commutator undercut "a"
Standard: 0.5 – 0.8 mm (0.02 – 0.03 in.)
Service limit: 0.2 mm (0.01 in.)

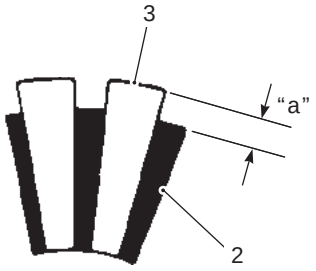

I9J011190024-01

2. Mica	3. Segment

- Check for continuity between the commutator (4) and the armature core (5) / shaft (6).
  Replace the armature if continuity is indicated.

Special tool
TOOL (B): 09930–99320 (Digital tester)

Tester knob indication
Continuity (•))))

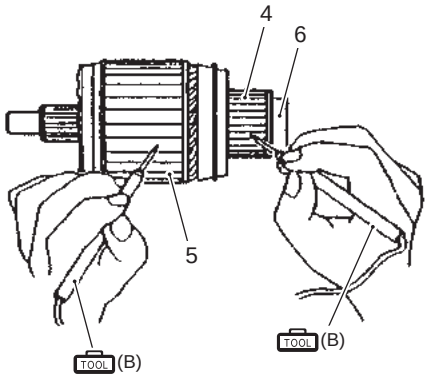

IDK111190004-01

- Check for continuity between adjacent commutator segments. Replace armature if no continuity is indicated.

Tester knob indication
Continuity (•))))

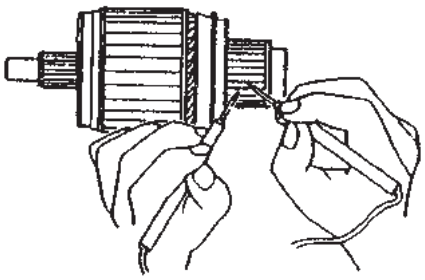

I9J011190026-01

Brushes
Check the length of each brush (1).
If brushes are worn down to the service limit, they must be replaced.

Special tool
TOOL (A): 09900–20101 (Vernier calipers (150 mm))

Brush length
Standard: 16.0 mm (0.63 in.)
Service limit: 12.0 mm (0.47 in.)

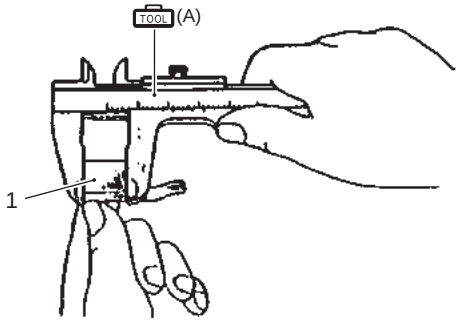

I9J011190027-01

Brush Holder

Check brush holder continuity.
Replace the brush holder if the tester doesn't show the below.

Special tool

TOOL : 09930–99320 (Digital tester)

Tester knob indication

Continuity (•))))

Brush holder continuity

	Continuity
Brush holder positive (+) to brush holder negative (–)	**No**
Brush holder positive (+) to base plate (ground)	**No**

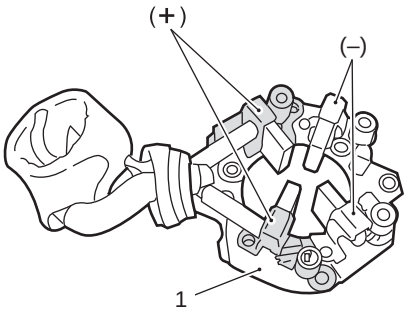

IDK111190005-01

1. Base plate

Shift Lever

Inspect the shift lever for wear. Replace if necessary.

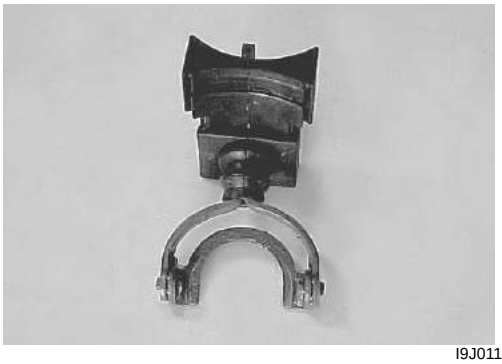

I9J011190029-01

Pinion and Over-Running Clutch

- Inspect the pinion for wear, damage or other abnormal conditions.
  Check that the clutch locks up when turned in the direction of drive and rotates smoothly in reverse direction. Replace if necessary.

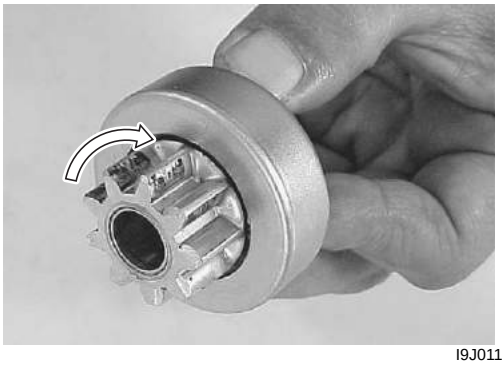

I9J011190030-01

- Inspect spline teeth for wear or other damage.
  Inspect the pinion for smooth movement. Replace if necessary.

I9J011190031-01

Gear

Inspect planetary gears and internal gear for wear, damage or other abnormal conditions.
Replace if necessary.

I9J011190032-01

Pinion Shaft / Pinion Shaft Bushing

- Inspect the pinion shaft for wear, damage or other abnormal conditions. Replace if necessary.
- Inspect the pinion shaft bushing for wear or other damage.
  Replace if necessary.

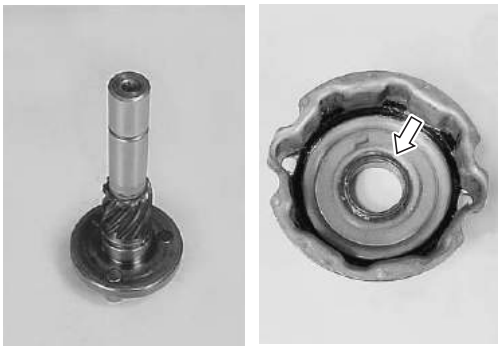

I9J011190033-01

Front Housing

- Inspect the front housing for wear, damage or other abnormal conditions. Replace if necessary.
- Inspect the bushing for wear or other damage. Replace if necessary.

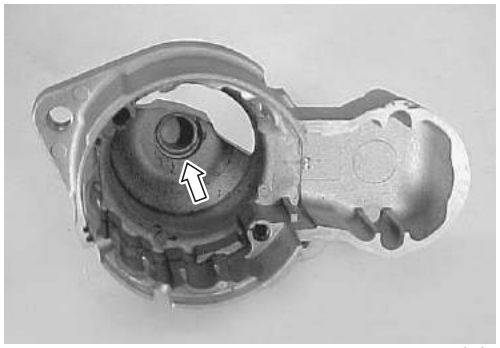

I9J011190034-01

Armature Shaft Bush

Inspect the bushing for wear or other damage.
Replace if necessary.

I9J011190035-01

Plunger

Inspect the plunger for wear or other damage.
Replace if necessary.

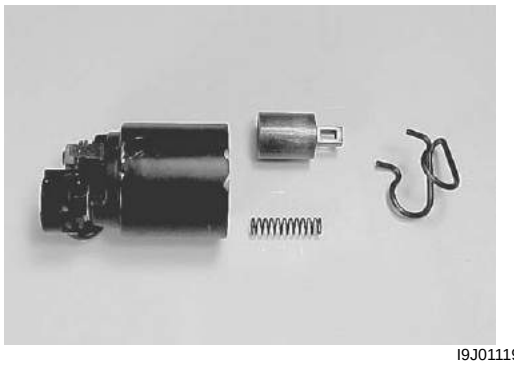

I9J011190036-01

Magnetic Switch

Push in the plunger and release. The plunger should return quickly to its original position.
Replace if necessary.

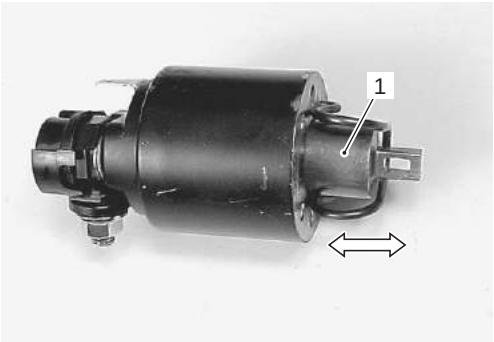

I9J011190037-01

1. Plunger	

Pull-in coil open circuit test

Check for continuity across the magnetic switch “S” terminal (1) and “M” terminal (2).
If no continuity exists, the coil is open and should be replaced.

Special tool
(A): 09930–99320 (Digital tester)

<u>Tester knob indication</u>
Continuity (•))))

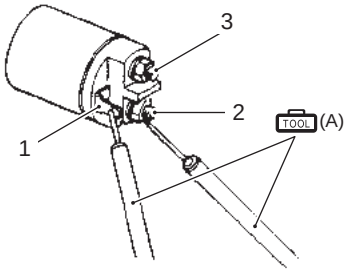

I9J011190038-02

1. Terminal “S”	3. Terminal “B”
2. Terminal “M”	

Hold-in coil open circuit test

Check for continuity across the magnetic switch “S” terminal (1) and coil case (4).
If no continuity exists, the coil is open and should be replaced.

Special tool

TOOL (A): 09930–99320 (Digital tester)

Tester knob indication

Continuity (•))))

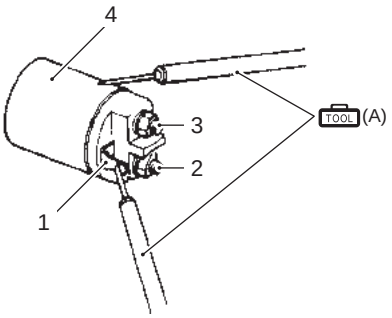

I9J011190039-01

1. Terminal “S”	3. Terminal “B”
2. Terminal “M”	4. Coil case

Contact points test

Put the plunger on the under side and then push the magnetic switch down.
At this time, check for continuity between terminal “B” and terminal “M”.
Continuity indicates proper condition. If no continuity exists, replace the magnetic switch and/or plunger.

Special tool

TOOL (A): 09930–99320 (Digital tester)

Tester knob indication

Continuity (•))))

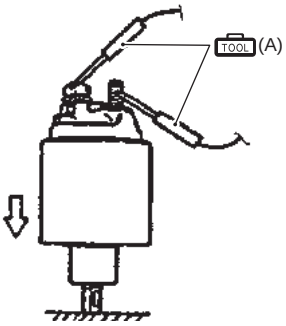

I9J011190040-01

Starter Motor Relay Inspection

CENDK1111906007

Inspect the starter motor relay using the following procedures:

1) Disconnect lead wire connector from ECM (1), then remove ECM.

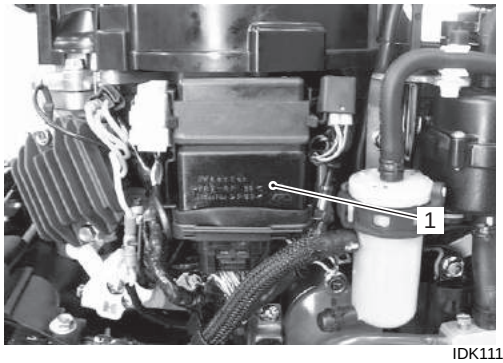

IDK111190017-01

2) Pull out the starter motor relay and relay cover (2) from electric parts holder. Remove the relay cover (3), then disconnect the starter motor relay (4) from the lead wire connector.

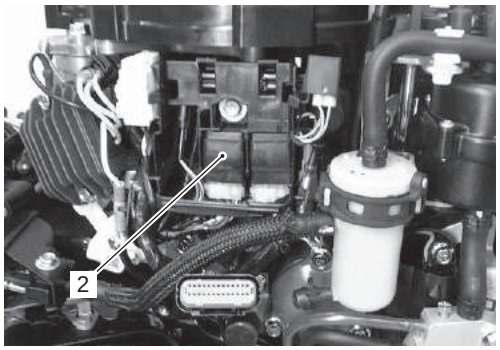

IDK111190018-01

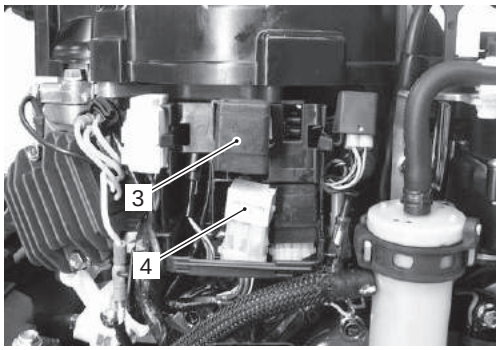

IDK111190019-01

3) Check continuity between terminal (5) and (6) each time 12 V power supply is applied to terminal (7) and (8).
Connect the positive (+) lead to terminal (8), and negative (–) lead to terminal (7).

NOTICE

If the 12 V power supply wire is connected to wrong terminal or touched to each other, the power supply wire, tester may be damaged.

Be careful not to touch 12 V power supply wires to each other or with other terminals.

Special tool
(A): 09930–99320 (Digital tester)

Tester knob indication
Continuity (•))))

Starter motor relay function

	Continuity
12 V power applied	**Yes**
12 V power not applied	**No**

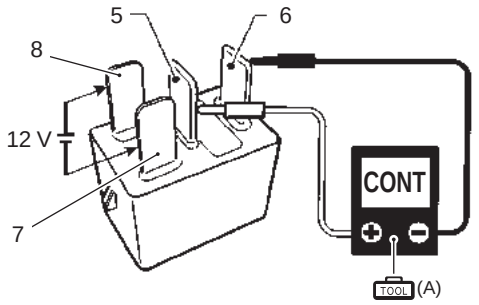

IDK111190001-01

4) Measure the resistance between relay terminals (7) and (8).
If out of specification, replace starter motor relay.

Tester knob indication
Resistance (Ω)

Starter motor relay solenoid coil resistance
Standard: 145 – 190 Ω

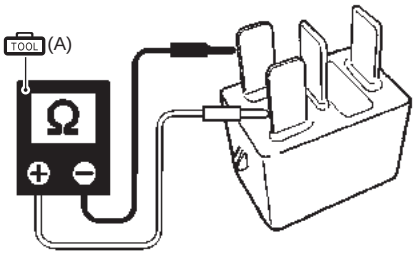

I9J011190044-02

5) Reinstall parts removed earlier.

Neutral Switch Inspection

CENDK1111906008

Check for continuity / infinity of the neutral switch.

Special tool
(A): 09930–99320 (Digital tester)

Tester knob indication
Continuity (•))))

1) Disconnect lead wire connector from ECM, then remove ECM.
2) Disconnect the neutral switch lead wire connector.
3) Check continuity / infinity between the Yellow / Green and Brown lead wires while operating the shift lever.

Special tool
(A): 09930–99320 (Digital tester)

Neutral switch function

Shift position	Tester indicates
Neutral	**Continuity**
Forward	**Infinity**
Reverse	**Infinity**

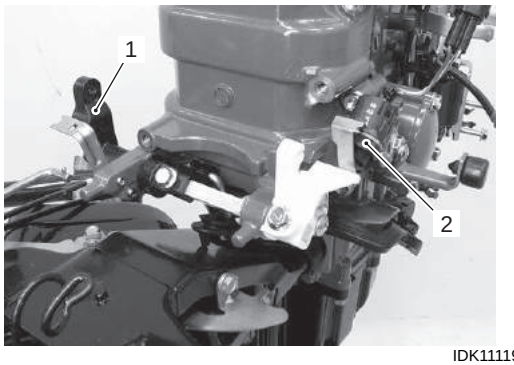

IDK111190020-01

1. Clutch shaft	2. Neutral switch

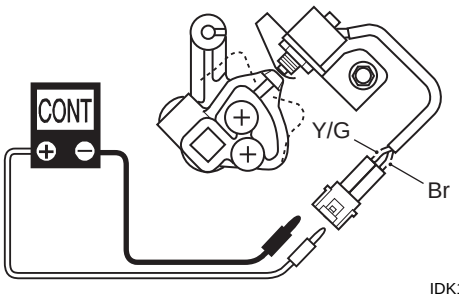

IDK111190006-01

4) If out of specification:
   - 1st:
     Check switch position adjustment, readjust if necessary.
   - 2nd:
     Replace the neutral switch and recheck.

NOTE

After installing the neutral switch, check for correct function by operating the shift lever.

Starter Button Inspection

CENDK1111906009

1) Disconnect the starter button lead wire connector.
2) Check the continuity / infinity between the wiring leads under the condition shown below.

Special tool
(A): 09930–99320 (Digital tester)

Tester knob indication
Continuity (•))))

	Tester probe connection		Tester indicates
	Red (+)	Black (–)	
Starter button not depressed	W/R	Br	Infinity
Starter button depressed			Continuity

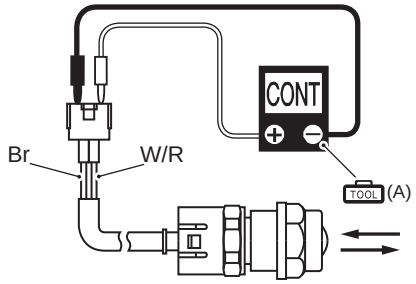

IDK111190008-01

3) If out of specifications, replace the starter button.

Manual Starting System

Precautions

Precaution for Manual Starting System

CENDK1111A00001

⚠ CAUTION

Failure to take proper precautions when servicing the recoil starter can cause personal injury.

Wear safety glasses and hand protection when winding or unwinding this component.

General Description

Manual Starting System

CENDK1111A01001

The manual starter engages the flywheel ratchet with one pawl when the starter grip is pulled.
A recoil spring is wound as the starter rope pulls and rewinds as the starter grip is returned to the case.
The NSI set linked to the clutch notch lever prevents accidental manual starter engagement while the motor is in gear.

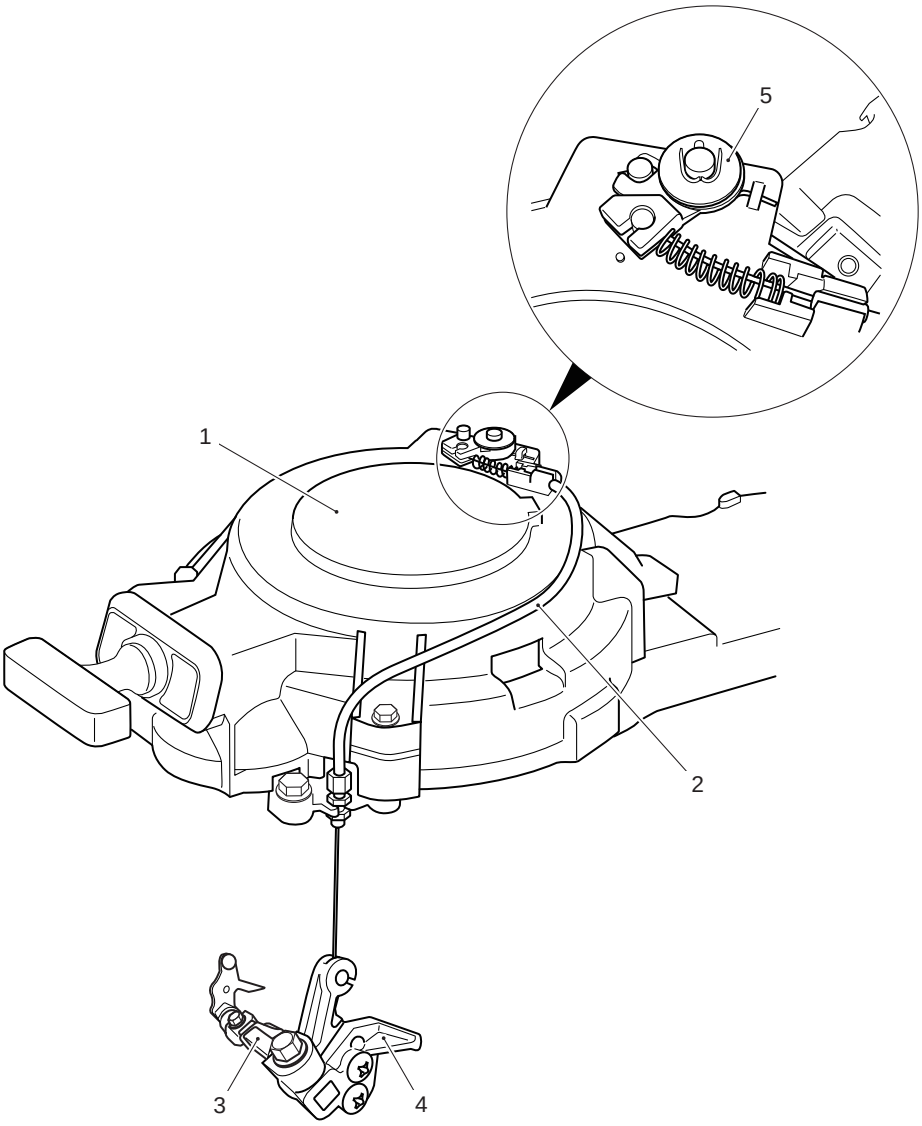

IDK1111A0028-03

1. Recoil starter	3. Clutch shaft	5. NSI set
2. NSI cable	4. Clutch notch lever	

Service Instructions

Recoil Starter Components

CENDK1111A06001

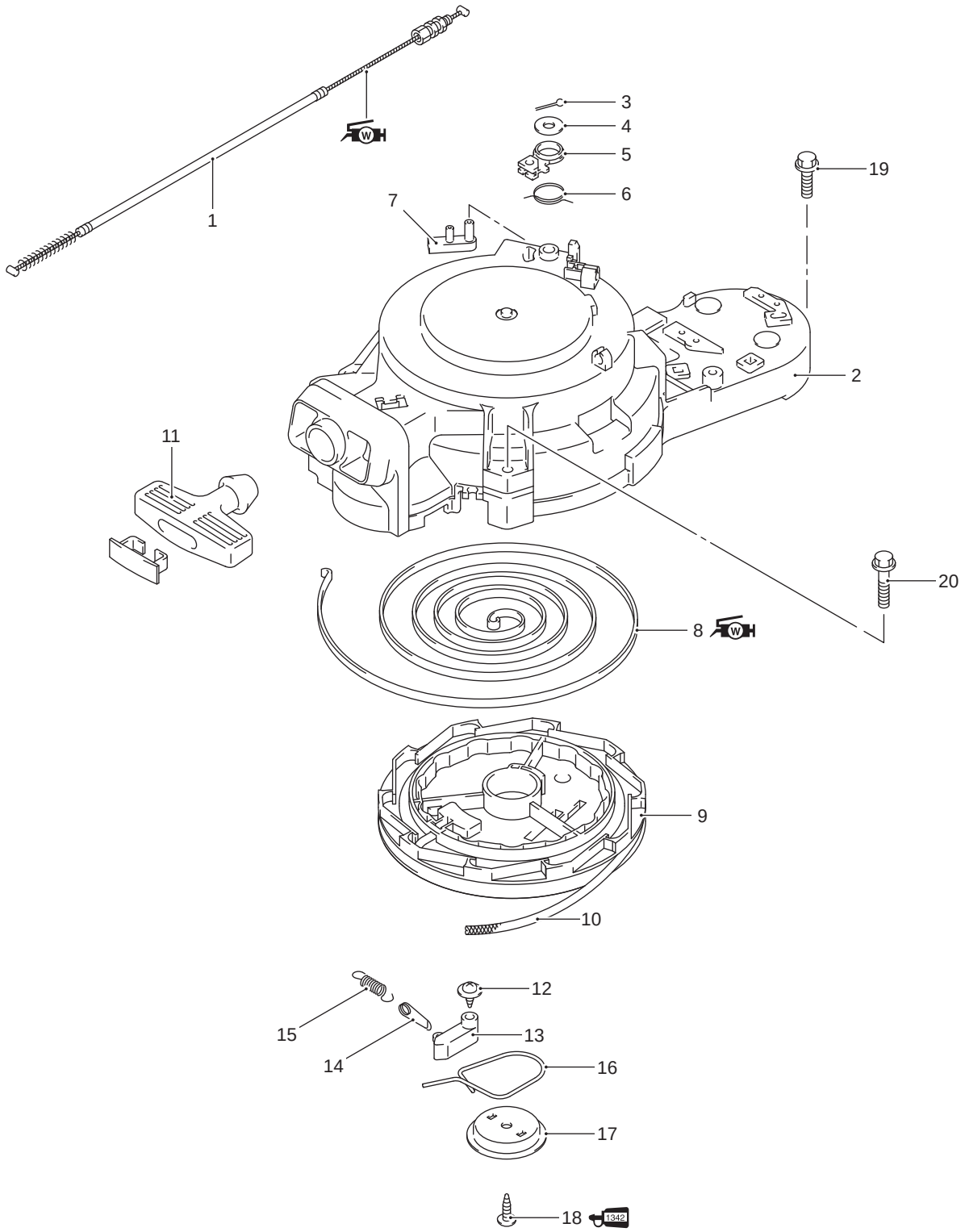

IDK1111A0033-02

1. NSI cable	7. Reel stopper	13. Ratchet	19. Bolt
2. Recoil starter case	8. Recoil spring	14. Ratchet guide	20. Bolt
3. Cotter pin	9. Reel	15. Return spring	1342 : Apply thread lock 1342.
4. Washer	10. Rope	16. Friction spring	W : Apply water resistant grease.
5. Stopper arm	11. Grip	17. Friction plate	
6. Spring	12. Screw	18. Screw	

Recoil Starter Removal and Installation

CENDK1111A06002

Removal

1) Remove both lower side covers.
   Refer to “Lower Side Cover Removal and Installation” in Section 2A (Page 2A-2).
2) Remove the three screws (1) securing the evaporation chamber (2), then slide the chamber (2) with hoses away from the recoil starter case.

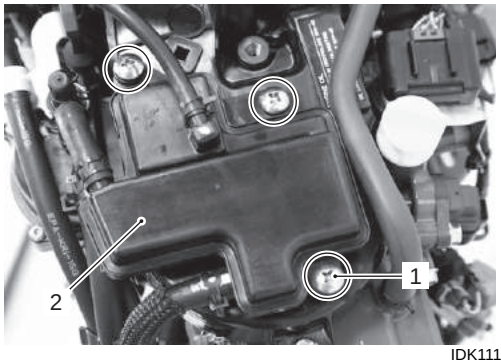

IDK1111A0001-02

3) Remove the two bolts (3) securing rectifier / regulator.

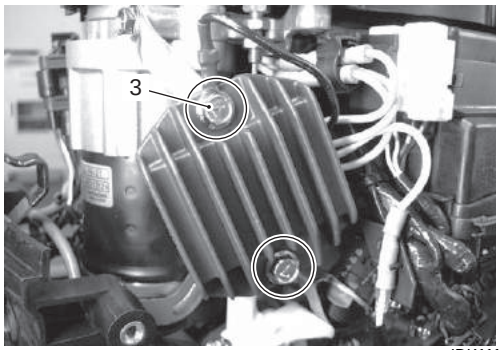

IDK1111A0002-01

4) Loosen the lock nuts (4) and remove NSI cable (5) from cable bracket (6).

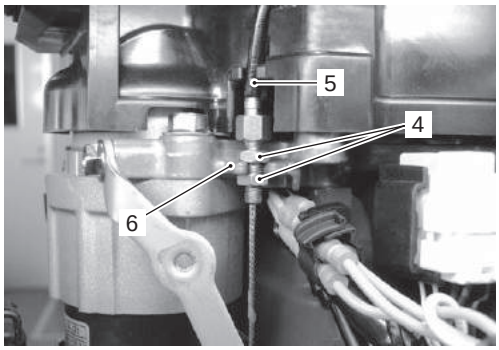

IDK1111A0003-01

5) Remove the NSI cable from clutch notch lever (7).

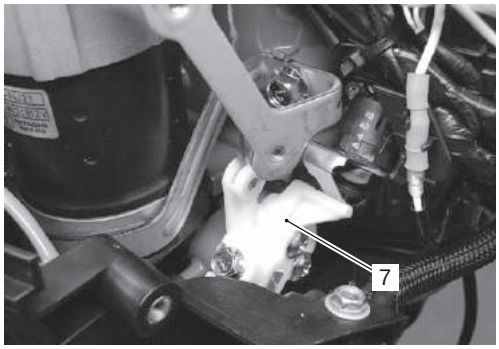

IDK1111A0029-01

6) Loosen the bolt (8) securing air intake silencer case.

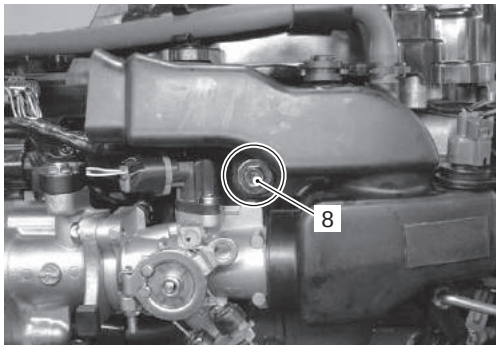

IDK1111A0030-01

7) Pull off the breather hose (9) from hose clamp (10). Slightly pull the intake silencer case (11) horizontally, then the grommet “B” on silencer case is away from recoil starter base “A” as shown below.

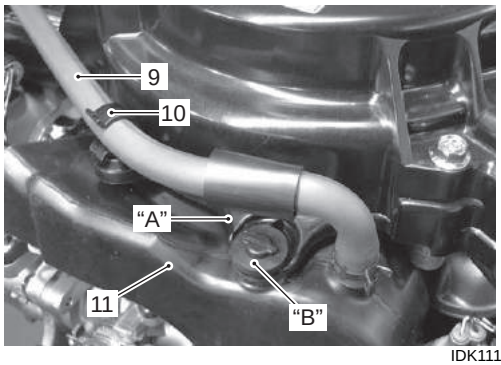

IDK1111A0031-02

8) Loosen the four bolts (12) securing recoil starter (13).
   Remove the recoil starter.

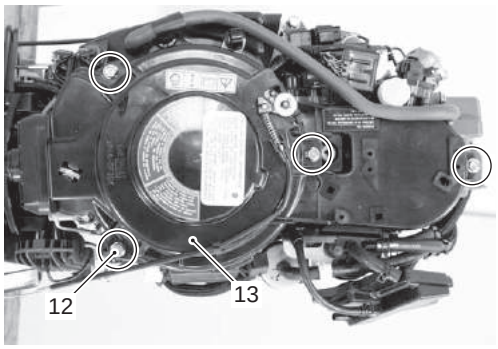

IDK1111A0032-01

Installation

Installation is in the reverse order of removal with special attention to the following.

- Tighten the silencer case bolt securely.
- Install the evaporation chamber, then tighten three screws securely.
- Check to ensure that all removed parts are back in place.
- Check the neutral start interlock function.
  Refer to “NSI Cable Installation and Adjustment” (Page 1J-8).
- Wire and hose routing matches service manual illustration.
  Refer to “Wiring Harness Routing Diagram” in Section 4A (Page 4A-3) and “Fuel Hose Routing” in Section 4B (Page 4B-2).

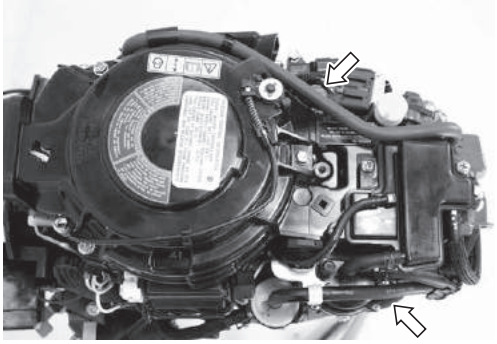

IDK1111A0034-01

Recoil Starter Disassembly and Assembly

CENDK1111A06003

⚠ CAUTION

Failure to take proper precautions when servicing the recoil starter can cause personal injury.

Wear safety glasses and hand protection when winding or unwinding this component.

Disassembly

1) Pull the rope out of recoil case and guide the rope into notch “A” in the reel (1), then turn the reel clockwise to release the coiled tension in the recoil spring.

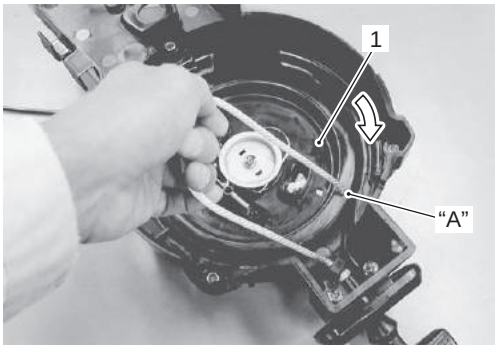

IDK1111A0004-01

2) Remove the screw (2), then remove the friction plate (3) with the friction spring (4).
3) Remove the reel (1).

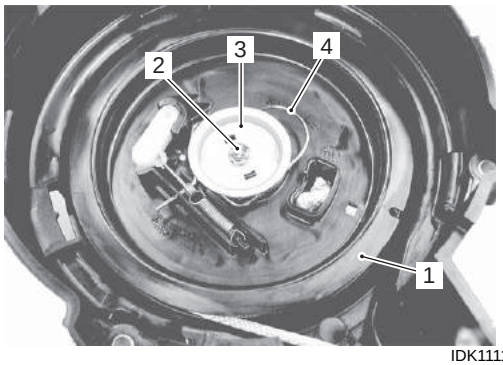

IDK1111A0005-01

4) Remove the screw (5) first, and then take off the ratchet (pawl) (6), ratchet guide (7) and return spring (8).

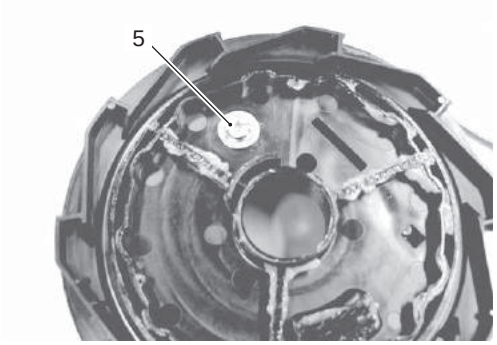

IDK1111A0006-02

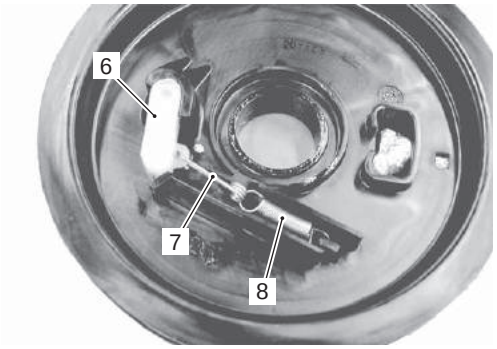

IDK1111A0008-01

5) Remove the recoil rope (9).

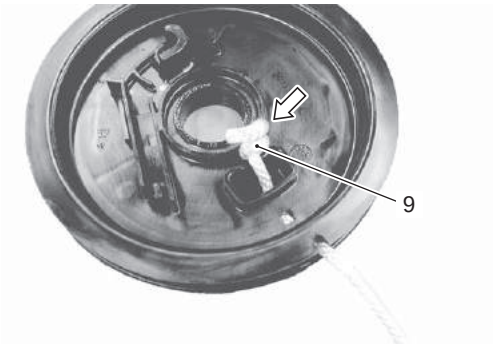

IDK1111A0007-01

NOTE

Do not remove the recoil spring unless replacement is necessary.
It should be visually inspected in its assembled position.

6) Remove the recoil spring (10).

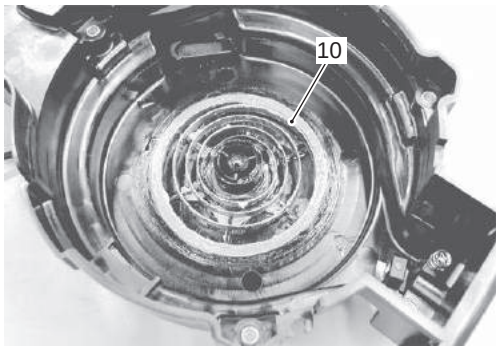

IDK1111A0009-01

7) Remove the NSI cable (11) with spring (12). Remove the cotter pin (13), washer (14) and stopper arm (15).

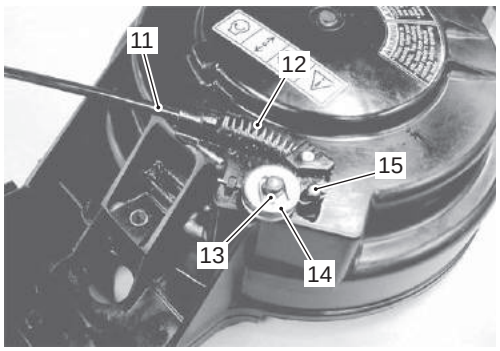

IDK1111A0010-01

8) Remove the reel stopper spring (16) and reel stopper (17).

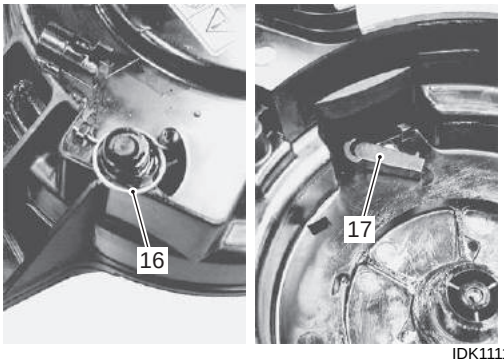

IDK1111A0011-01

Assembly

Reassembly is in the reverse order of disassembly with special attention to the following reassembling step.

- Install the reel stopper (1).

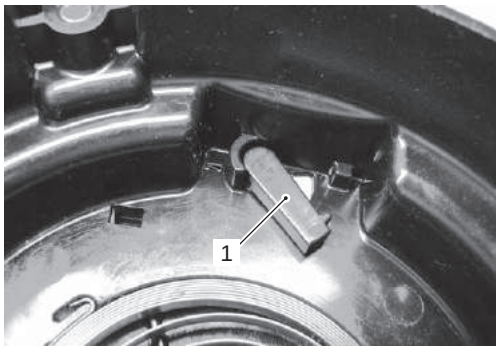

IDK1111A0025-01

- Install the stopper spring (2) as shown in figure.

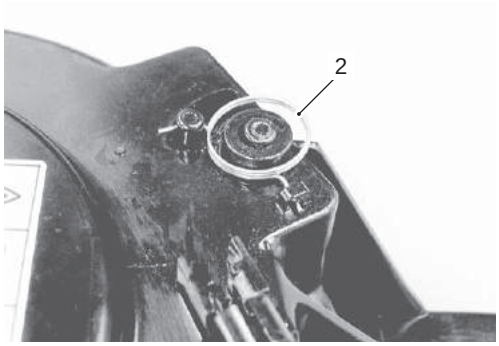

IDK1111A0012-01

- Install NSI set and NSI cable (3).
  Apply grease to NSI cable.

  : Grease 99000–25350 (SUZUKI Water Resistant Grease EP2 (250 g))

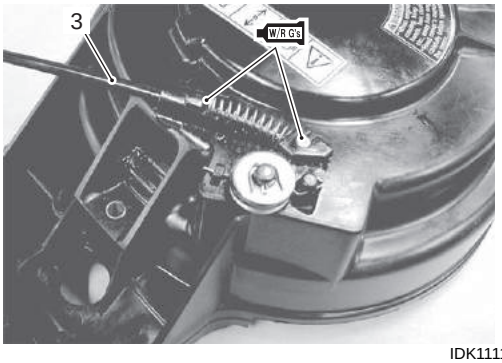

IDK1111A0013-01

- Secure the outer end “A” of recoil spring (4) on groove “B” in recoil case and wind spring inward towards center of case in a counterclockwise direction.

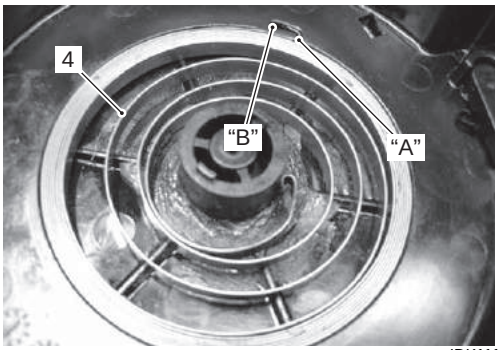

IDK1111A0014-01

- Install the recoil rope (5).

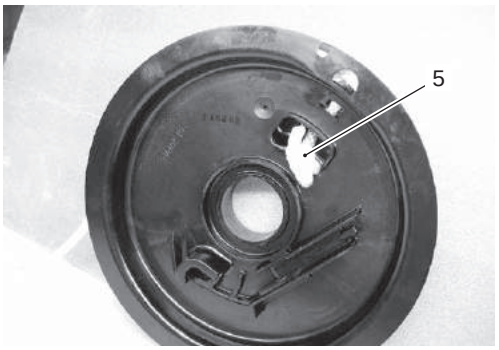

IDK1111A0015-01

- Install the ratchet set (6), then tighten ratchet with screw (7).
  Apply thread lock 1342 to screw (7) before threading.

IDK1111A0016-01

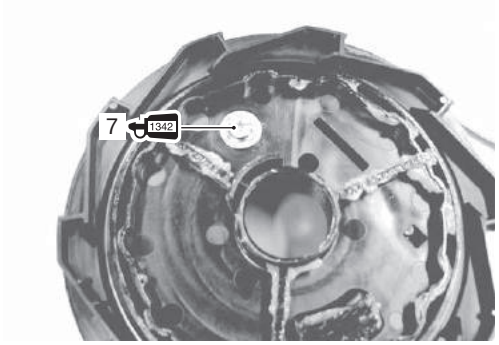

IDK1111A0026-01

- Install the reel (8) on the recoil case.

NOTE

- **Apply grease to reel as shown figure.**
- **Align groove “C” in the reel with bent end “D” of recoil spring.**

: Grease 99000–25350 (SUZUKI Water Resistant Grease EP2 (250 g))

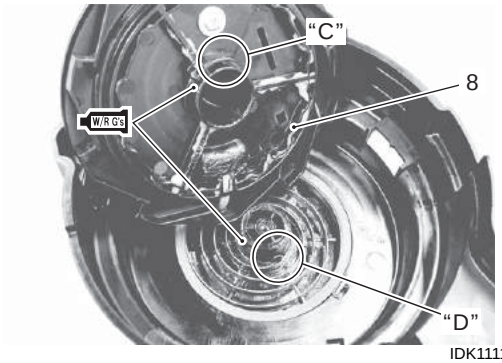

IDK1111A0018-01

- Install the friction plate (9) (with friction spring (10)) and secure it with screw (11).
  Apply thread lock 1342 to screw (11) before threading.

  1342 : Thread lock cement 99000–32050 (SUZUKI Thread Lock 1342 (50 g))

  NOTE

  Twist friction plate slightly to align holes “E” in plate with square lugs “F” on center boss.

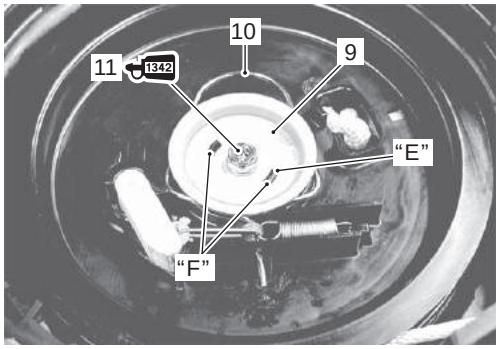

IDK1111A0019-01

- After assembling, guide the rope into notch in the reel and rotate the reel approximately 5 turns counterclockwise until the spring is tensioned.

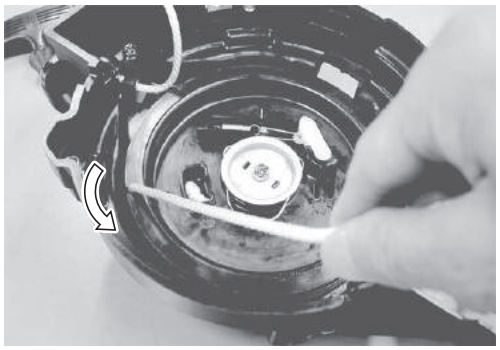

IDK1111A0020-01

Recoil Starter Components Cleaning and Inspection

CENDK1111A06004

NOTE

If any parts is worn excessively, cracked, defective or damaged in any way, it must be replaced.

- Wash metal components in cleaning solvent and dry with compressed air before inspection.
- Inspect the ratchet (pawl), stopper arm and all springs.
  If there is any defect such as excessive wear or damage, replace it.

IDK1111A0021-01

- Inspect the reel and recoil case.
  If any cracks or damage is found on them, replace it.

IDK1111A0022-01

- Inspect the recoil rope.
  If the recoil rope is worn or damaged, replace it.

IDK1111A0023-01

- Inspect the recoil spring.
  If there is any cracks, deformation or excessive curve on the recoil spring, replace it.

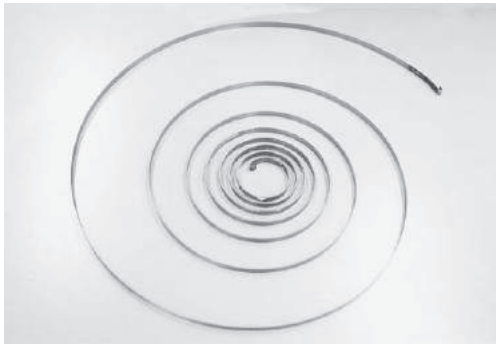

IDK1111A0024-01

NSI Cable Installation and Adjustment

CENDK1111A06005

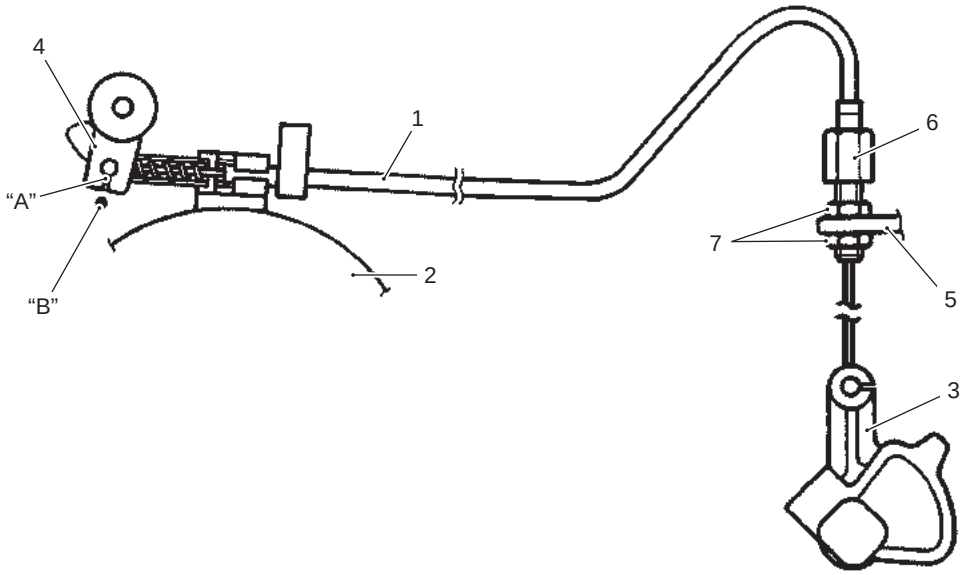

IDK1111A0027-01

1) Shift into "Neutral" position.
2) Install the NSI cable (1) in the recoil starter (2), the clutch notch lever (3), the stopper arm (4) and the cable bracket (5).
3) Turn the adjustment nut (6) to align the slot "A" on the stopper arm (4) with the punch mark "B" on the recoil starter case.
4) Pull the recoil starter grip and make sure that the starter does not work when the shift lever is in "Forward" and "Reverse" position.
5) Tighten the lock nuts (7).
6) Apply water resistant grease to inner cable, the cable end and cable holding area.

: Grease 99000–25350 (SUZUKI Water Resistant Grease EP2 (250 g))

⚠ WARNING

If the NSI cable is removed or left without correct adjustment, there is a high risk of losing one's balance and/or being thrown overboard if the motor starts in gear.

Do not operate the motor when the NSI cable is detached or the adjustment is not correctly done.

Charging System

General Description

Charging System Description

CENDK1111B01001

The battery charging system circuit is illustrated below.
It is composed of the Battery Charge Coil, Rectifier / regulator and Battery. The AC current generated from the battery charge coil is converted by the rectifier / regulator into regulated DC current which is used to charge the battery.

Battery charge coil output
On the electric starter models:
Standard: 12 V 12 A (144 W) at 3 000 r/min
On the manual starter models:
Standard: 12 V 6 A (72 W) at 5 000 r/min

Regulated voltage
Standard: 13.5 – 14.4 Volts

Electric Starter Model

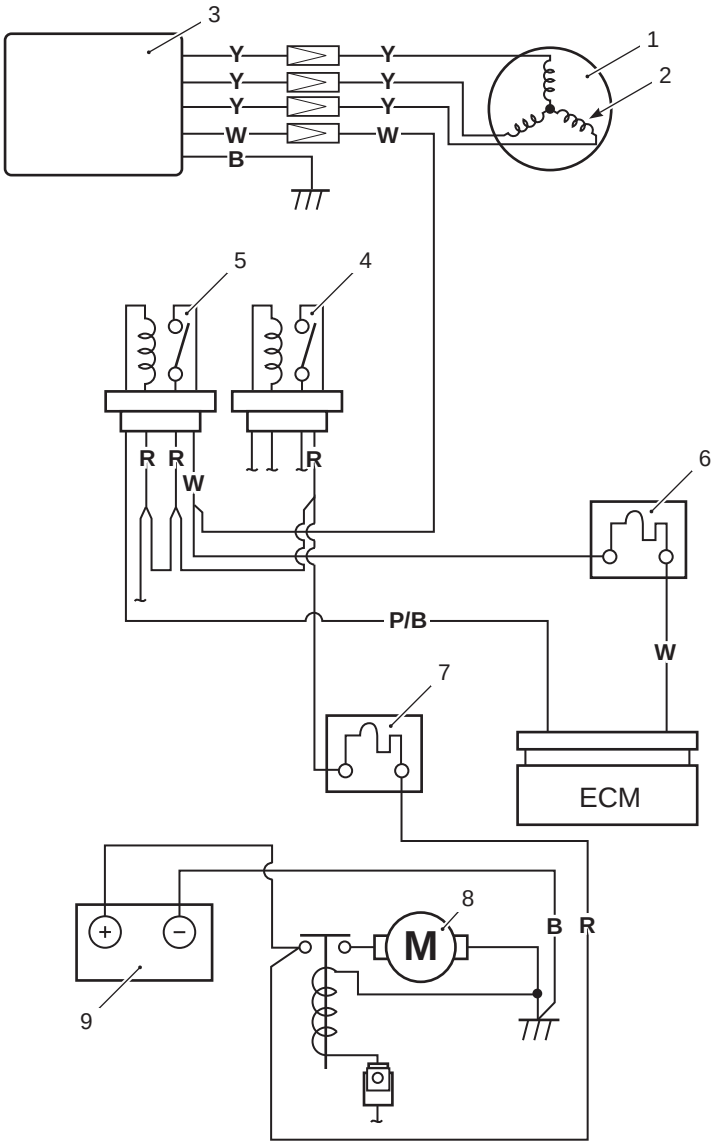

IDK1111B0001-04

1. Magneto	4. Starter motor relay	7. Fuse 30 amp. (main)
2. Battery charge coil	5. Battery relay	8. Starter motor
3. Rectifier / Regulator	6. ECM Fuse 10 amp.	9. Battery

Manual Starter Model

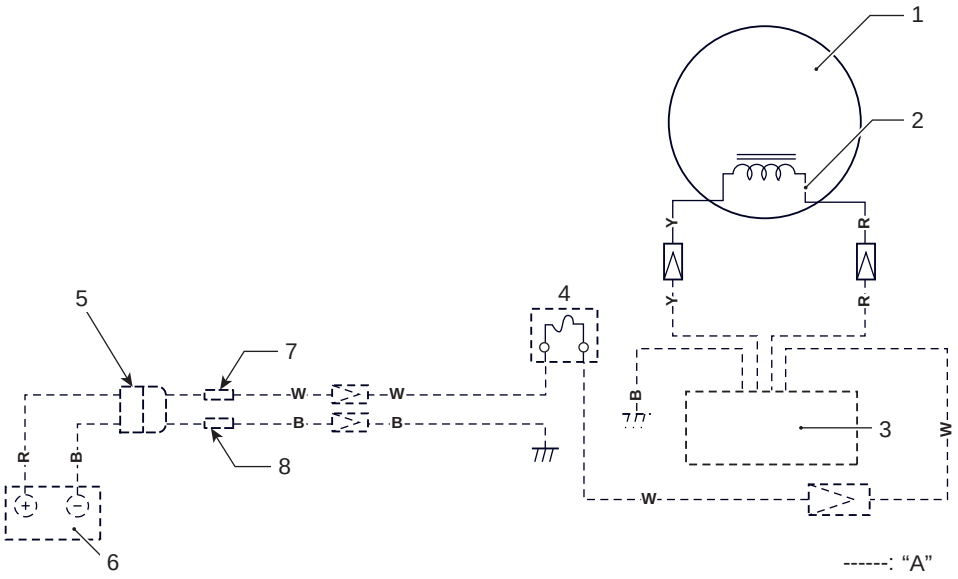

IAJ3111B0002-01

1. Magneto	4. Fuse 20 amp.	7. Y-tube
2. Battery charge coil	5. Receptacle plug	8. R-tube
3. Rectifier / Regulator	6. Battery	“A”: Option

Battery Requirement Description

CENDK1111B01002

Refer to “Battery Requirement” in Section 0A (Page 0A-6).

Component Location

Charging System Components Location

CENDK1111B03001

Refer to “Wiring Harness Routing Diagram” in Section 4A (Page 4A-3).

Diagnostic Information and Procedures

Charging System Diagnosis

CENDK1111B04001

Condition	Possible cause	Correction / Reference item
Alternator (Battery charge coil) does not charge.	Open or short circuit lead wires.	*Repair or replace.*
	Open or short circuit battery charge coil.	*Replace.*
	Rectifier / Regulator failure.	*Replace.*
	Fuse blown out.	*Replace.*
	Poor or broken battery connection.	*Repair or Replace.*
	Battery relay failure.	*Replace.*
	ECM failure.	*Replace.*
Alternator (Battery charge coil) overcharge.	Rectifier / Regulator failure.	*Replace.*
	Poorly grounded rectifier / regulator.	*Repair or Retighten.*
Unstable charging	Short circuit battery charge coil.	*Replace.*
	Loose lead wire connection.	*Repair or replace.*
	Rectifier / Regulator failure.	*Replace.*
	Poor or broken battery connection.	*Repair or replace.*

Service Instructions

Charging System Construction

CENDK1111B06001

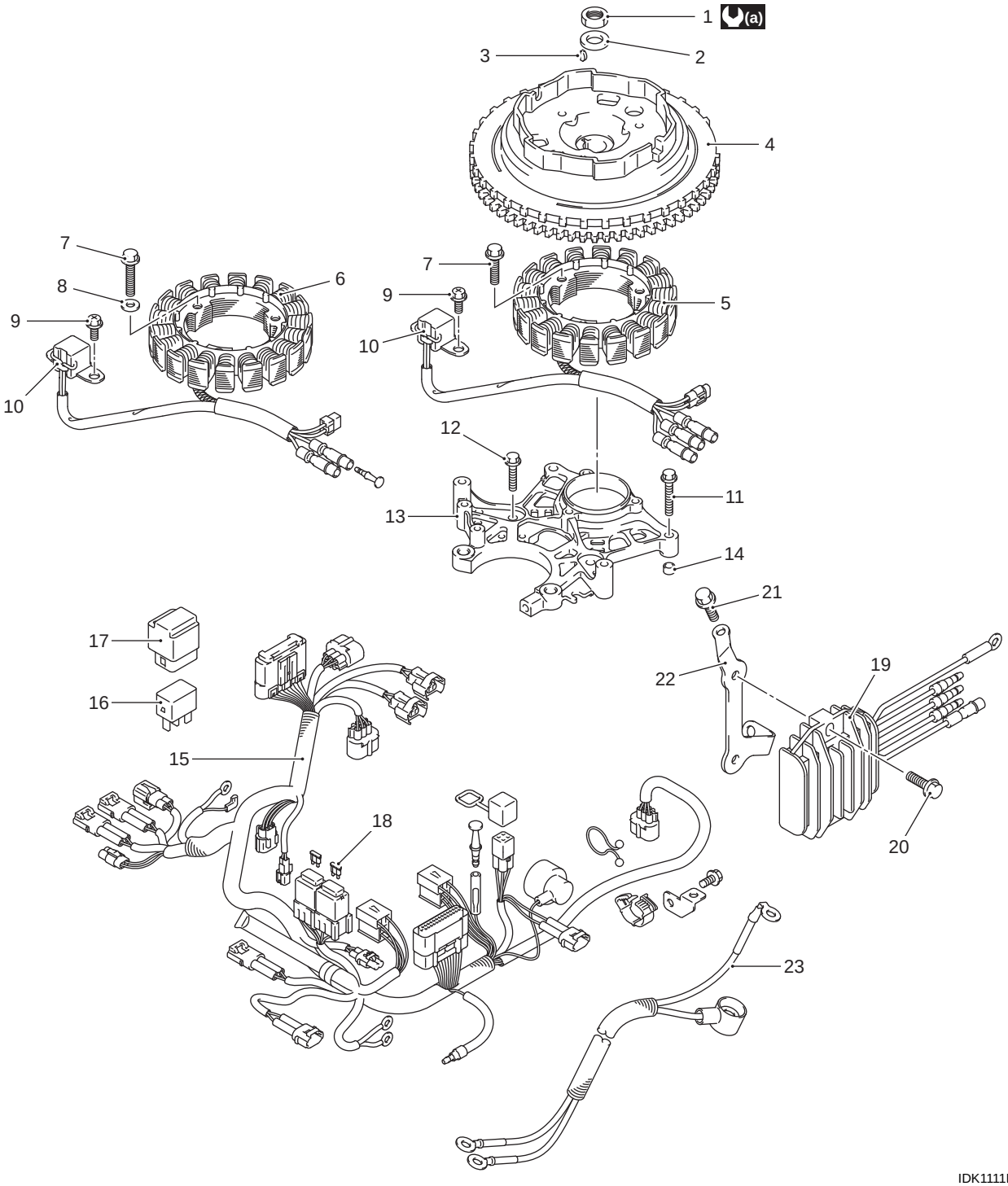

IDK1111B0051-01

1. Nut	7. Bolt	13. Stator base	19. Rectifier/ Regulator
2. Washer	8. Washer	14. Dowel pin	20. Bolt
3. Key	9. Bolt	15. Wiring harness assembly	21. Bolt
4. Flywheel	10. CKP sensor	16. Battery relay	22. Bracket
5. Battery charge coil (Electric start model)	11. Bolt	17. Relay holder	23. Battery cable
6. Battery charge coil and ECM power source coil (Manual start model)	12. Bolt	18. Fuse	(a) : 90 N·m (9.0 kgf-m, 65 lbf-ft)

Flywheel Removal and Installation

CENDK1111B06002

Removal

⚠ CAUTION

Failure to take proper precaution when removing flywheel may result in personal injury and/or damage to electronic components.

Prior to removing flywheel, disconnect battery cables from battery.

1) Remove the recoil starter.
   Refer to “Recoil Starter Removal and Installation” in Section 1J (Page 1J-3).
2) Using special tool, loosen flywheel nut 2 – 3 turns.

NOTE

Do not remove flywheel nut at this time. This nut prevents damage to the crankshaft when using flywheel remover tools.

Special tool
TOOL (A): 09930–39520 (Flywheel holder)

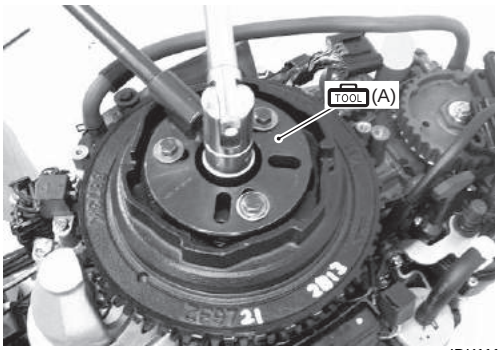

IDK1111B0054-01

3) Using special tools, loosen flywheel from crankshaft.

Special tool
TOOL (B): 09930–39210 (Flywheel remover bolt)
TOOL (C): 09930–39411 (Flywheel remover)

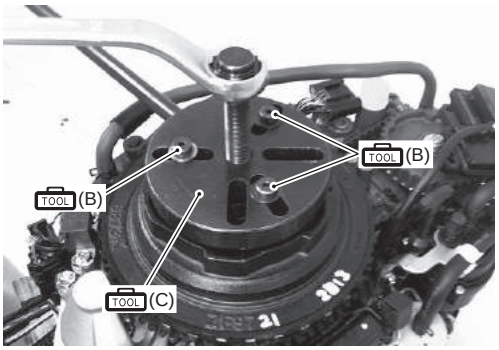

IDK1111B0055-01

4) Remove the flywheel nut (1), washer (2), flywheel (3) and key (4).

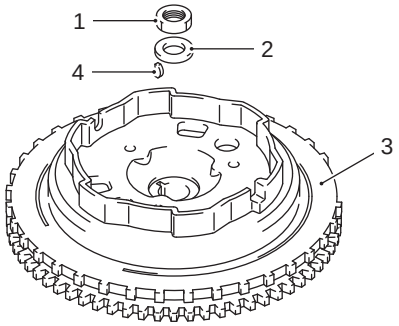

IDK1111B0052-01

Installation

Installation is reverse order of removal with special attention to the following steps.

- Clean flywheel and crankshaft mating surfaces with cleaning solvent.

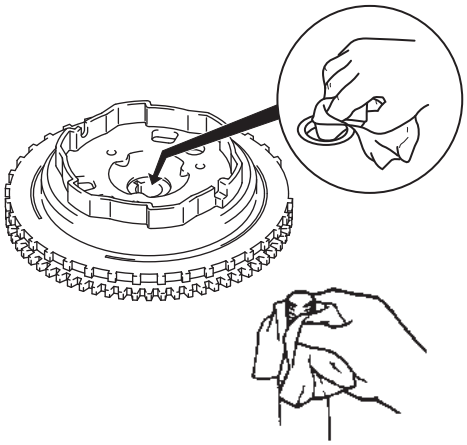

IDK1111B0053-01

- Tighten flywheel nut to specified torque.

Special tool
TOOL (A): 09930–39520 (Flywheel holder)

Tightening torque
Flywheel nut (a): 90 N·m (9.0 kgf-m, 65 lbf-ft)

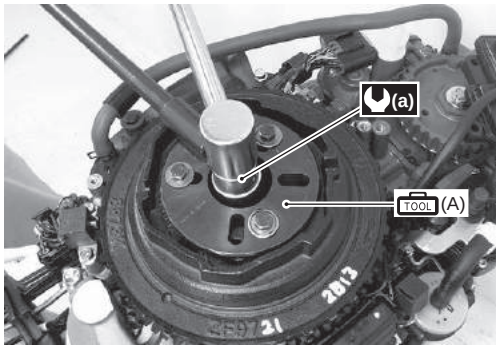

IDK1111B0056-01

- After installing flywheel and torquing nut to specification, check air gap between CKP sensor and flywheel reluctor bars.

  CKP sensor air gap “a”
  0.75 mm (0.030 in)

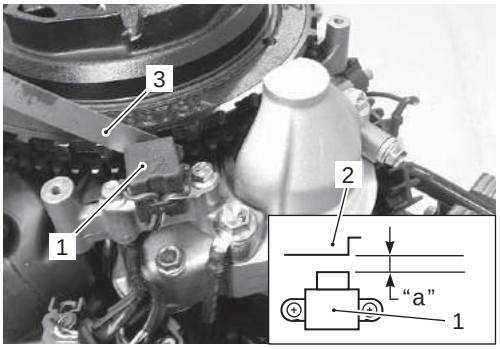

IDK1111B0002-04

1. CKP sensor	3. Thickness gauge
2. Flywheel reluctor bar	

Final Assembly Check
All Parts removed have been returned to their original position.

Battery Charge Coil / CKP Sensor / Stator Base Removal and Installation

CENDK1111B06009

⚠ CAUTION

Failure to take proper precaution when removing electrical parts may result in personal injury and/or damage to electronic components.

Prior to removing electrical parts, disconnect battery cables from battery.

NOTE

Motor depicted is electric starter model.

Removal

1) Remove flywheel.
   Refer to “Flywheel Removal and Installation” (Page 1K-4).

2) Disconnect the starter switch lead wire connector (1), the caution lamp lead wire connector (2) and the engine stop switch lead wire connector (3).

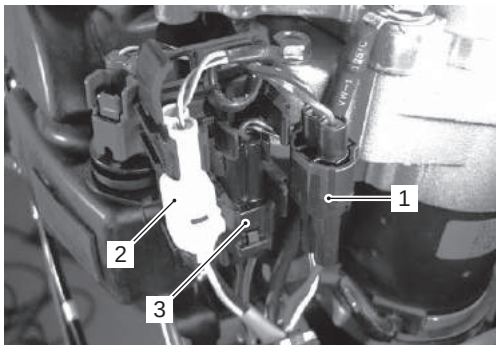

IDK1111B0007-01

3) Remove the air intake silencer case (4).
   Refer to “Air Intake Silencer Case Removal and Installation” in Section 1D (Page 1D-3).

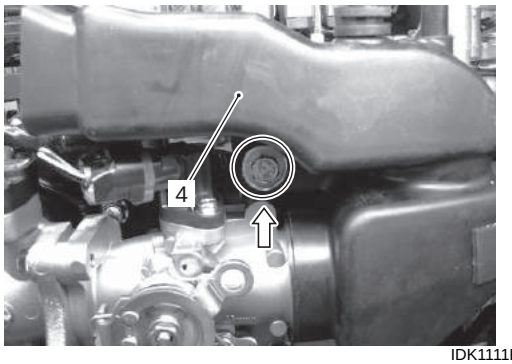

IDK1111B0008-01

4) Remove nut (5) and positive (+) battery cable (6), positive (Red) cable (7) from the magnetic switch (8) of starter motor.
   Disconnect the red lead wire (9) from “S” terminal of starter magnetic switch.

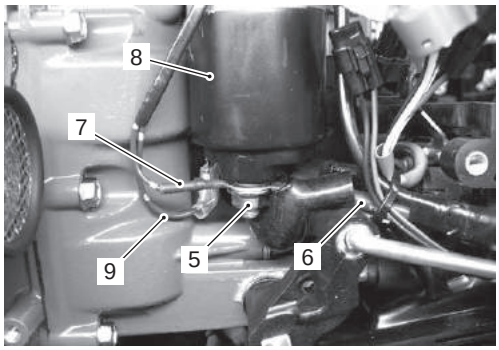

IDK1111B0009-01

5) Disconnect the TPS lead wire connector (10), the IAC valve lead wire connector (11) and the MAP sensor lead wire connector (12).

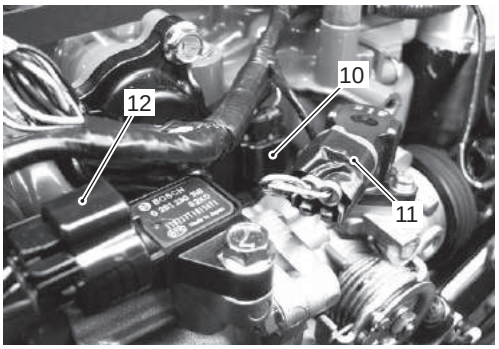

IDK1111B0010-01

6) Remove the bolt (13) securing anode cover.
Disconnect the CMP sensor lead wire connector (14) at sensor.

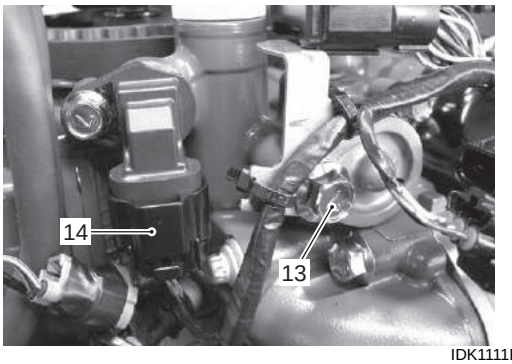

IDK1111B0011-01

7) Disconnect the fuel injector lead wire connectors (15).

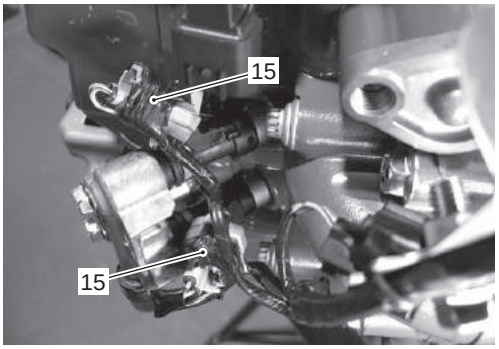

IDK1111B0012-01

8) Remove the bolt (16) securing rectifier / regulator bracket.

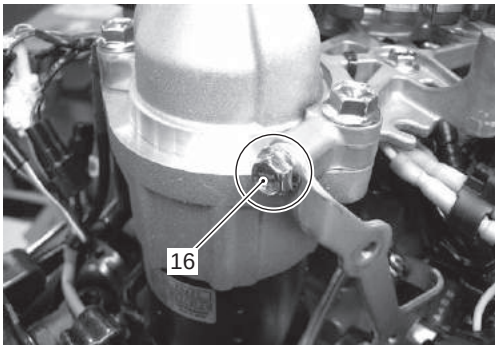

IDK1111B0013-01

9) Disconnect lead wire connector from ECM (17), then remove ECM.

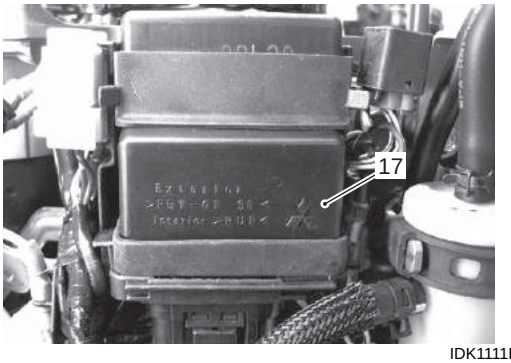

IDK1111B0014-01

10) Disconnect the neutral switch lead wire connector (18).
Disconnect the cylinder temp. sensor lead wire connector (19).
Disconnect the CKP sensor lead wire connector (20).

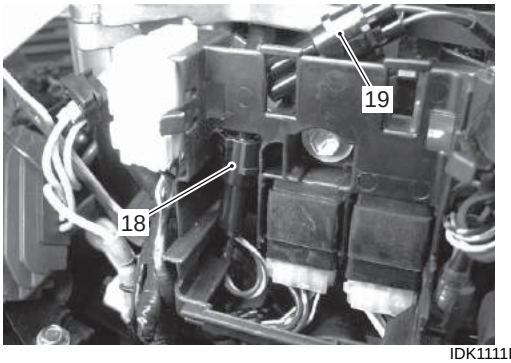

IDK1111B0015-01

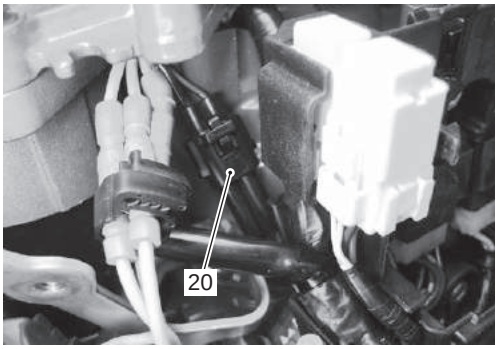

IDK1111B0016-01

11) Remove the bolts (21) securing electric parts holder.

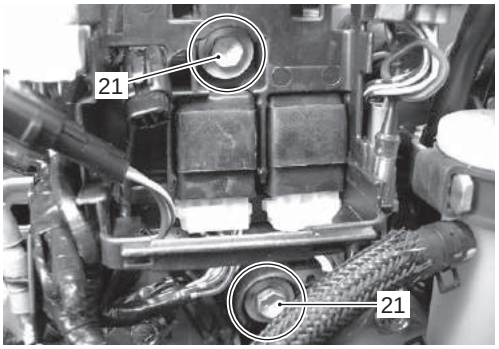

IDK1111B0017-01

12) Remove the bolt (22) securing harness GND lead wire.

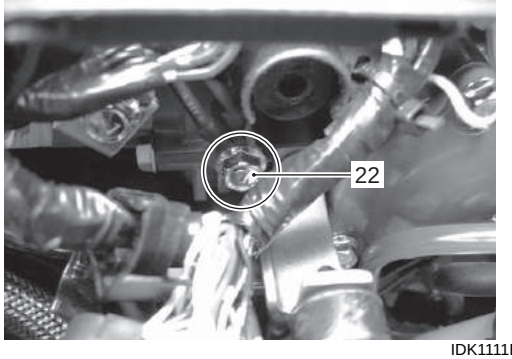

IDK1111B0018-01

13) Remove the fuel filter (23) from filter bracket.

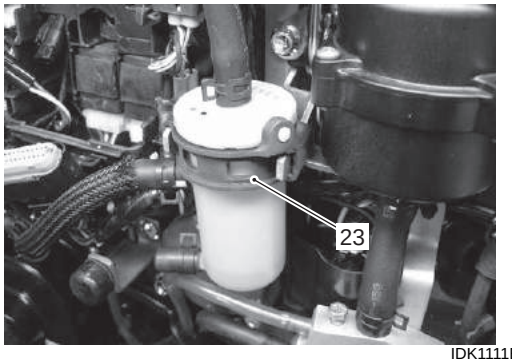

IDK1111B0019-01

14) Disconnect the ignition coil lead wire connector (24). Loosen screw (25) and disconnect lead wire from oil pressure switch.

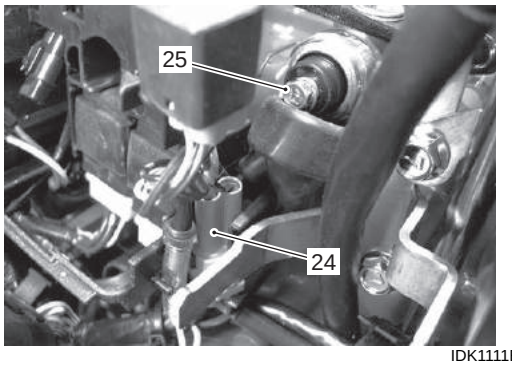

IDK1111B0020-02

15) Loosen the bolts (26) securing high pressure fuel pump cover.

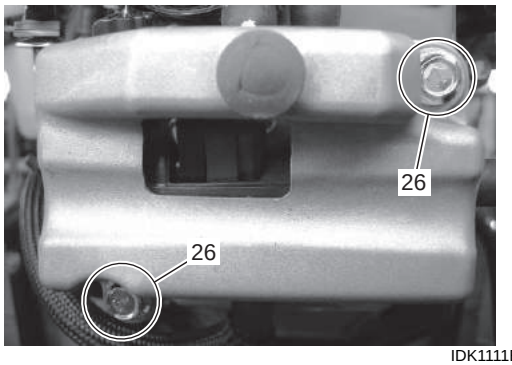

IDK1111B0021-01

16) Disconnect the lead wire connector (27) at high pressure fuel pump.
Remove harness clamp (28) from harness clamp bracket by releasing clamps' lock.

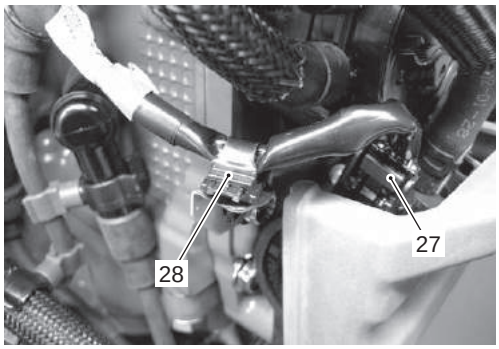

IDK1111B0022-01

17) Remove harness clamp (29) from bracket (30) by releasing clamps' lock.
Remove the harness clamp (31).

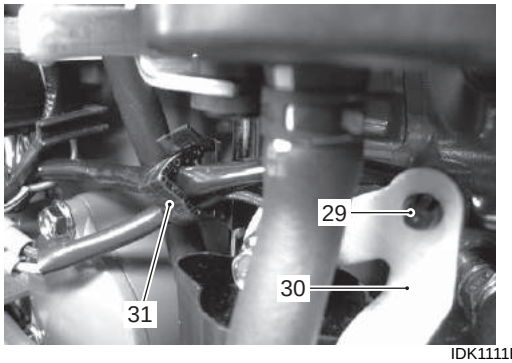

IDK1111B0023-01

18) Disconnect all lead wire connectors from rectifier and regulator.

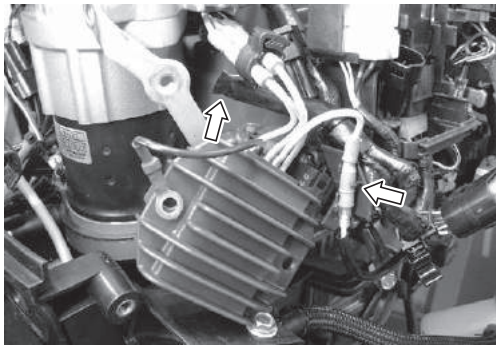

IDK1111B0024-01

19) Remove the six bolts (32) securing stator base (33).

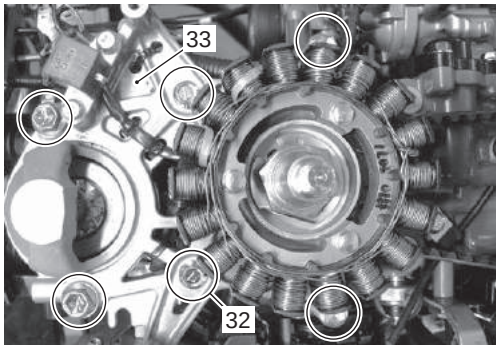

IDK1111B0025-01

20) Remove the stator base (with battery charge coil / CKP sensor, electric parts holder and main harness).

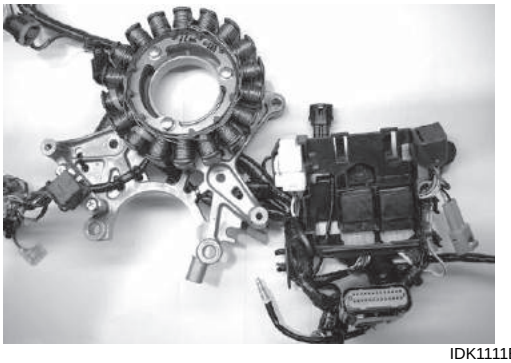

IDK1111B0026-01

21) Remove the three screws (34) securing the battery charge coil (35).

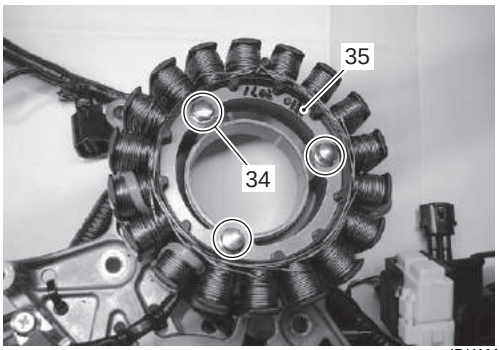

IDK1111B0027-01

22) Remove two screws (36) securing the CKP sensor (37), then cut the all cable tie (38) securing harness to stator base.

23) Remove the battery charge coil and CKP sensor (with wiring harness) from stator base.

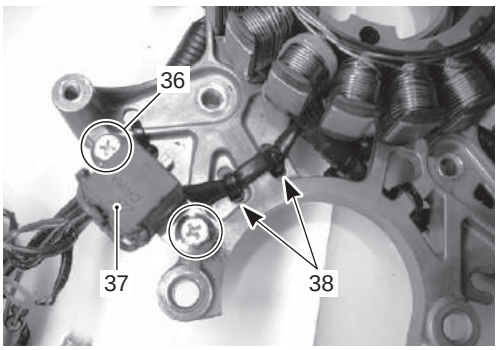

IDK1111B0029-01

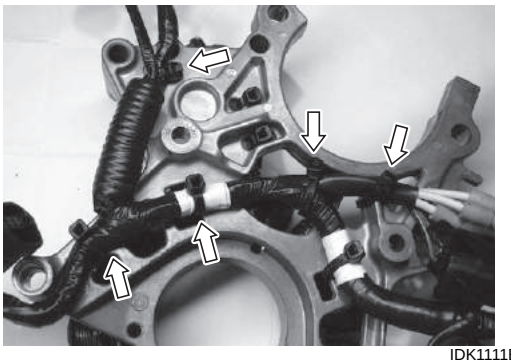

IDK1111B0030-01

Installation

Installation is reverse order of removal with special attention to the following steps.

Battery charge coil / CKP sensor

- Secure the lead wire and wiring harness to the stator base with cable tie, then check that coil lead wire is routed properly and away from hot or rotating parts. For wire routing, refer to “Wiring Harness Routing Diagram” in Section 4A (Page 4A-3).

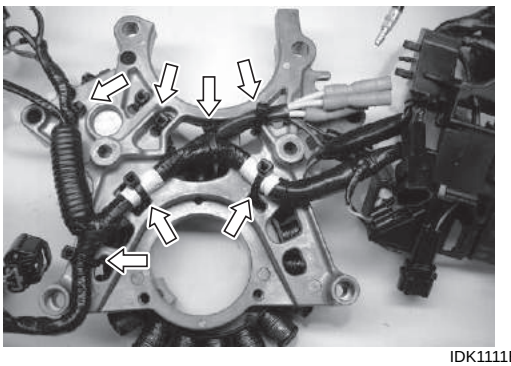

IDK1111B0031-01

- Install battery charge coil (1), then tighten coil mounting screws securely.
- Install CKP sensor (2), then tighten sensor mounting screws securely.

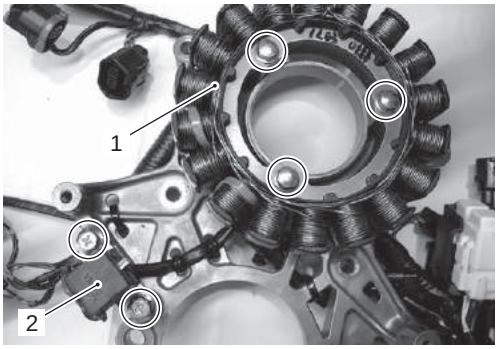

IDK1111B0032-01

Stator base

- Install two dowel pins (1) in position.

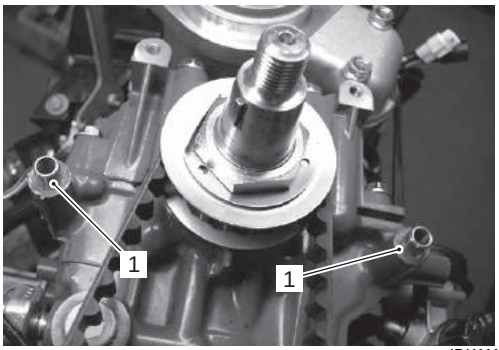

IDK1111B0033-01

- Install stator base, then tighten stator base mounting bolts securely.

  Tightening torque
  Stator base bolt [8 mm] (a): 23 N·m (2.3 kgf-m, 16.5 lbf-ft)
  Stator base bolt [6 mm] (b): 10 N·m (1.0 kgf-m, 7.2 lbf-ft)

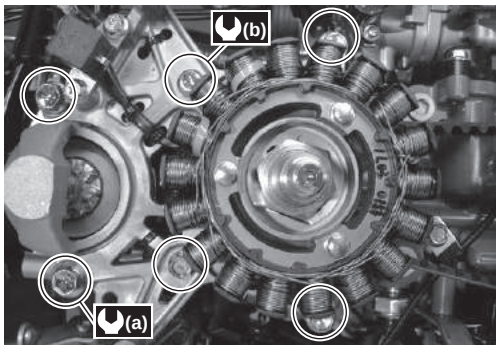

IDK1111B0034-01

Wiring

- Install the positive battery cable (1) and positive cable (2) to starter motor, then tighten nut securely.
  Connect the lead wire (3) to “S” terminal of starter magnetic switch.

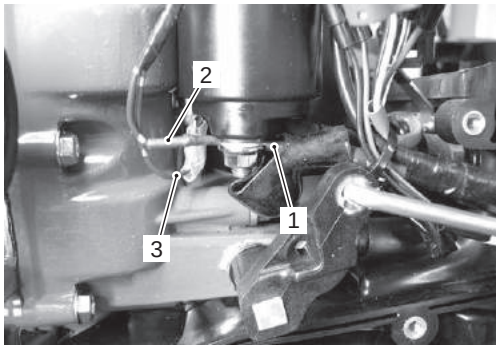

IDK1111B0035-01

- Connect the lead wire connectors to each sensor and actuator.

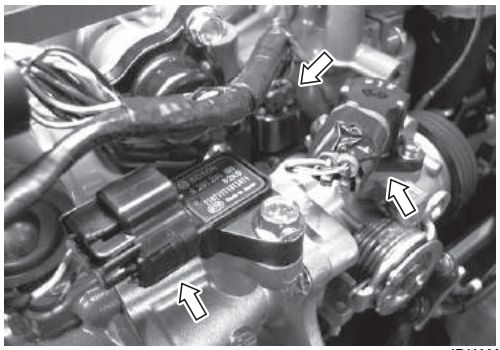
IDK1111B0036-01

- Tighten the anode cover bolt (4) securely.

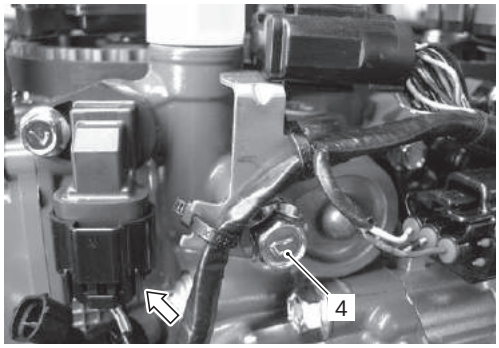

IDK1111B0037-01

- Install the air intake silencer case (5).
  Refer to “Air Intake Silencer Case Removal and Installation” in Section 1D (Page 1D-3).

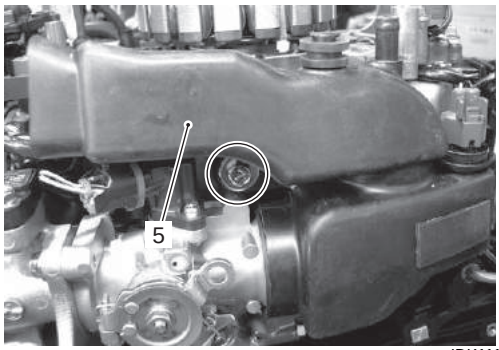

IDK1111B0038-01

- Install the electric parts holder (6), then tighten it with bolts.
  Tighten the harness GND lead wire with bolt.

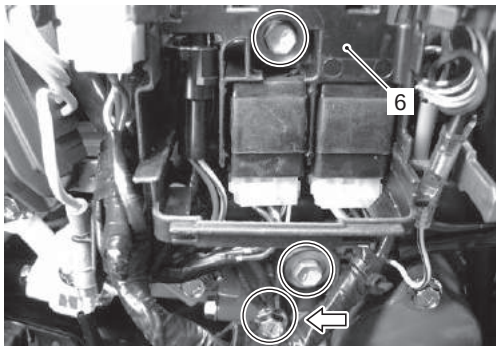

IDK1111B0039-01

- Connect the lead wire connectors to the Ignition coil and the high pressure fuel pump.
- Install ECM (7) in position.

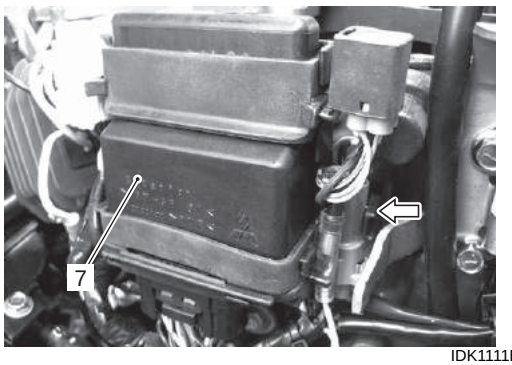

IDK1111B0040-01

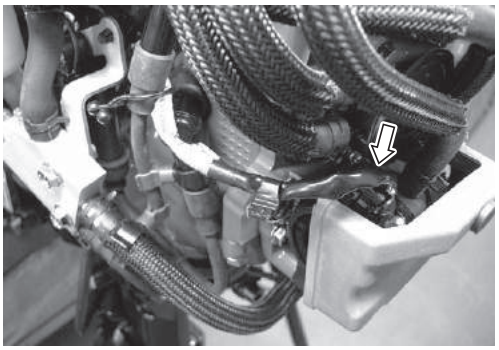

IDK1111B0041-01

Flywheel

- Install flywheel and tighten flywheel nut to specified torque.
  Refer to “Flywheel Removal and Installation” (Page 1K-4).

  Special tool
  (A): 09930–39520 (Flywheel holder)

  Tightening torque
  Flywheel nut (a): 90 N·m (9.0 kgf-m, 65 lbf-ft)

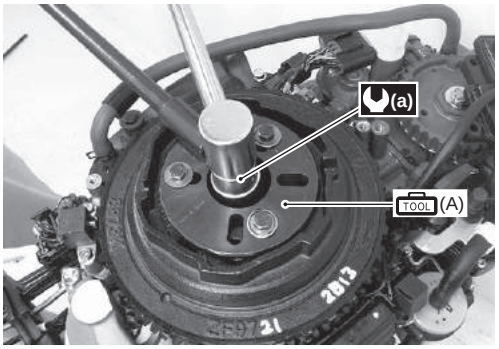

IDK1111B0056-01

Final assembly check

Perform the following checks to ensure proper and safe operation.

- All parts removed have been returned to their original positions.
- Wire routing match’s service manual illustration.
  For wire routing, refer to “Wiring Harness Routing Diagram” in Section 4A (Page 4A-3).
- Check that wiring harness / lead wire are routed properly and away from hot or rotating parts.

ECM Power Source Coil / Battery Charge Coil / CKP Sensor / Stator Base Removal and Installation

CENDK1111B06010

NOTE

Motor depicted is manual starter model.

Removal

1) Remove flywheel.
   Refer to “Flywheel Removal and Installation” (Page 1K-4).
2) Disconnect the caution lamp lead wire connector (1) and the engine stop switch lead wire connector (2).

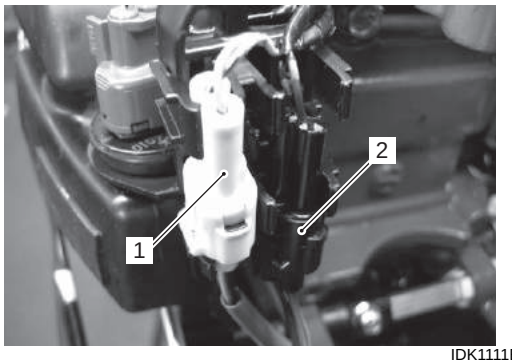

IDK1111B0057-01

3) Remove the air intake silencer case (3).
   Refer to “Air Intake Silencer Case Removal and Installation” in Section 1D (Page 1D-3).

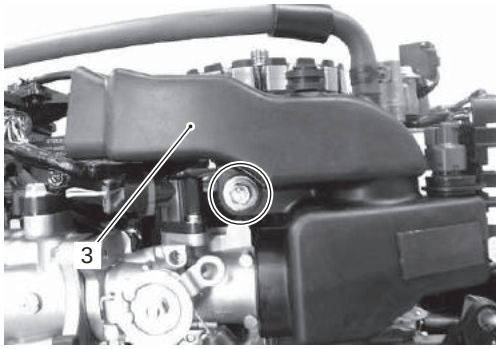

IDK1111B0058-01

4) Disconnect the TPS lead wire connector (4), the IAC valve lead wire connector (5) and the MAP sensor lead wire connector (6).

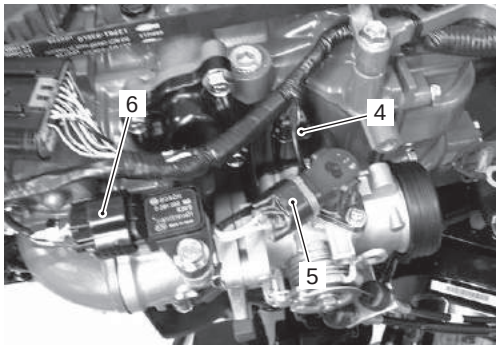

IDK1111B0059-02

5) Remove the bolt (7) securing anode cover.
Disconnect the CMP sensor lead wire connector (8) at sensor.

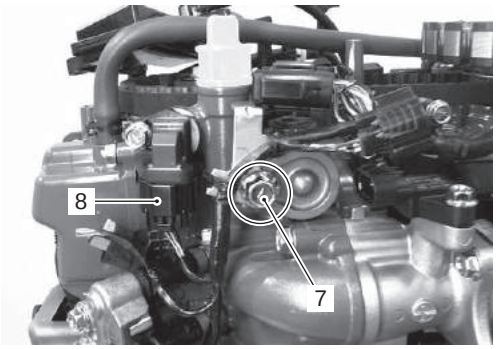

IDK1111B0060-01

6) Disconnect the fuel injector lead wire connectors (9).

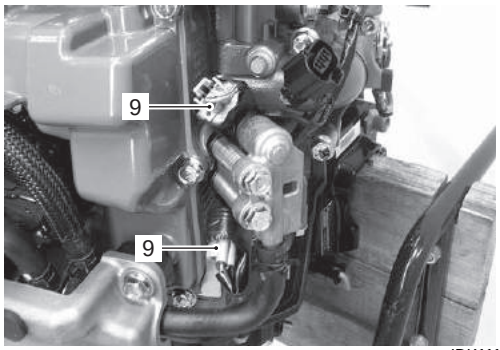

IDK1111B0061-01

7) Disconnect lead wire connector from ECM (10), then remove ECM.

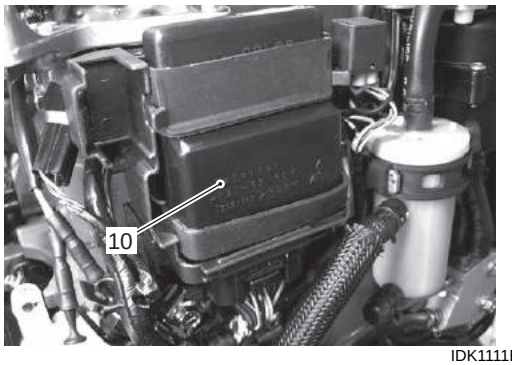

IDK1111B0062-01

8) Disconnect the neutral switch lead wire connector (10).
Disconnect the cylinder temp. sensor lead wire connector (11).
Disconnect the power source / CKP sensor lead wire connector (12).

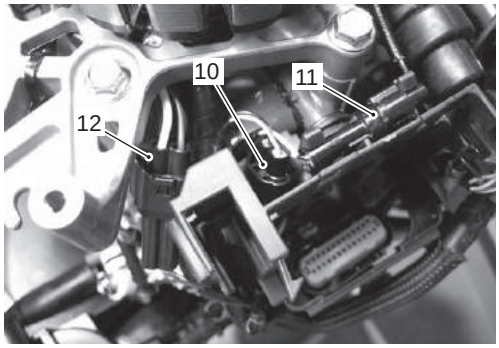

IDK1111B0063-01

9) Remove the bolts (13) securing electric parts holder.

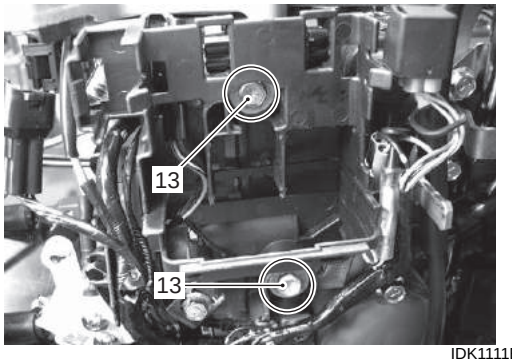

IDK1111B0064-01

10) Remove the bolt (14) securing harness GND lead wire.

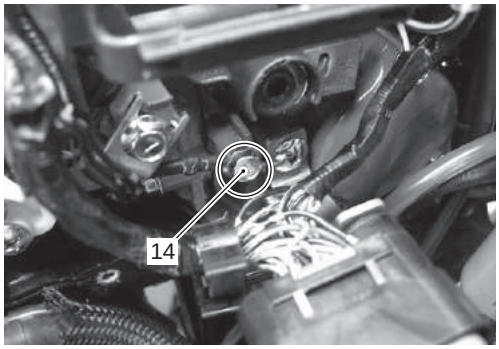

IDK1111B0065-01

11) Remove the fuel filter (15) from filter bracket.

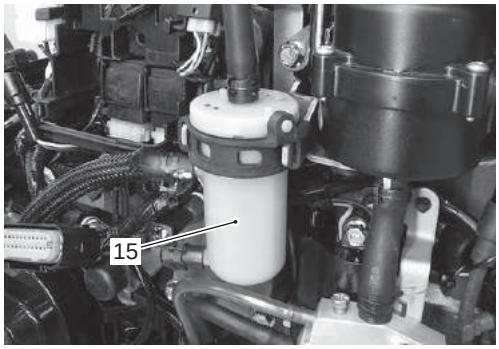

IDK1111B0066-01

12) Disconnect the ignition coil lead wire connector (16). Loosen screw and disconnect lead wire from oil pressure switch (17).

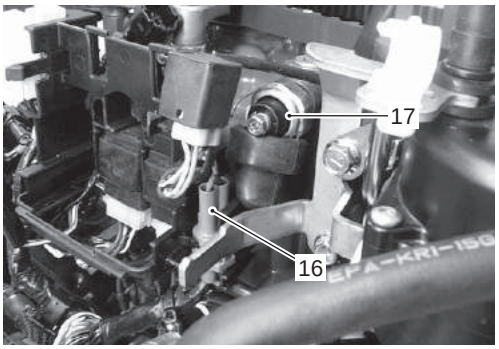

IDK1111B0067-01

13) Disconnect the lead wire connector (18) at high pressure fuel pump.
Remove harness clamp (19) from harness clamp bracket by releasing clamps' lock.

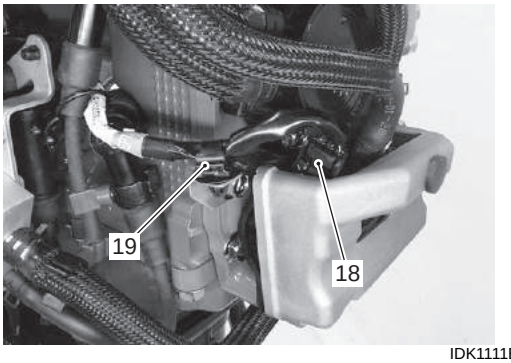

IDK1111B0068-01

14) Remove harness clamp (20) from bracket (21) by releasing clamps' lock.

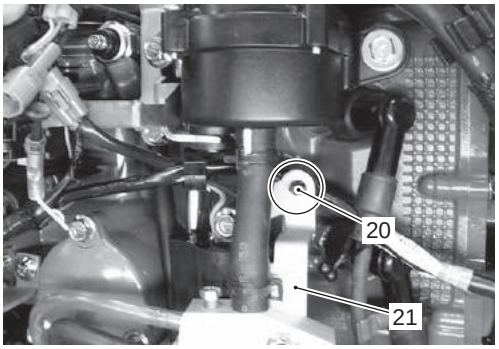

IDK1111B0069-01

15) Remove the four bolts (22) securing stator base (23).

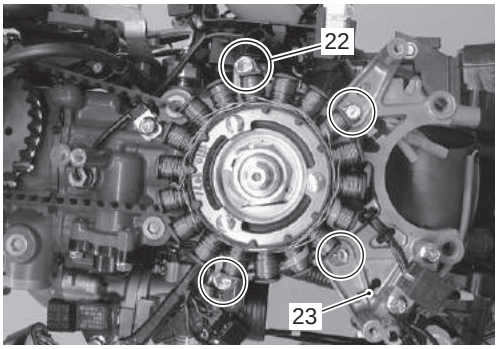

IDK1111B0070-01

16) Remove the stator base (with ECM power source coil / battery charge coil / CKP sensor and main harness).

17) Remove the three screws (24) securing the ECM power source coil / battery charge coil (25).

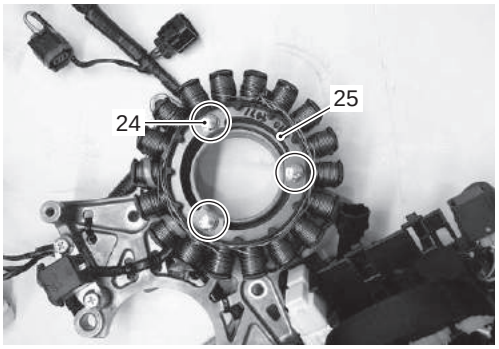

IDK1111B0071-01

18) Remove two screws (26) securing the CKP sensor (27).
Cut the all cable tie securing harness to stator base.

19) Remove the ECM Power source coil / battery charge coil and CKP sensor (with wiring harness) from stator base.

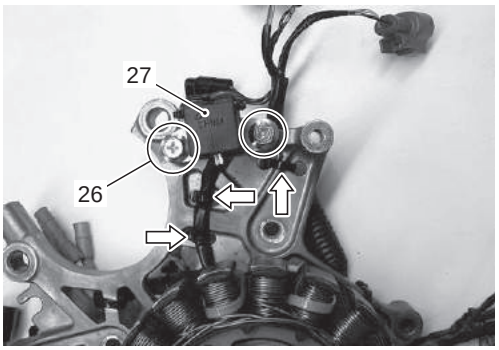

IDK1111B0072-01

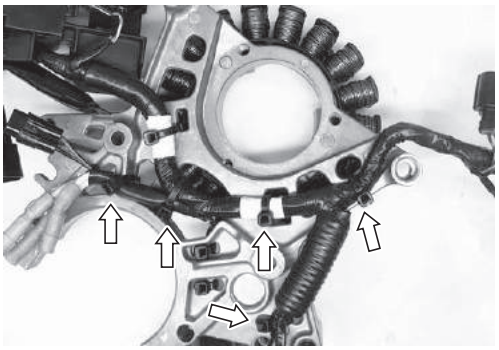

IDK1111B0073-01

Installation

Installation is reverse order of removal with special attention to the following steps.

ECM power source coil / Battery charge coil / CKP sensor

- Secure the lead wire and wiring harness to the stator base with cable tie, then check that coil lead wire is routed properly and away from hot or rotating parts. For wire routing, refer to “Wiring Harness Routing Diagram” in Section 4A (Page 4A-3).

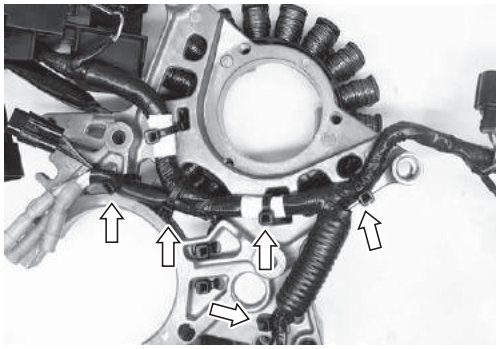

IDK1111B0073-01

- Install battery charge coil (1), then tighten coil mounting screws securely.

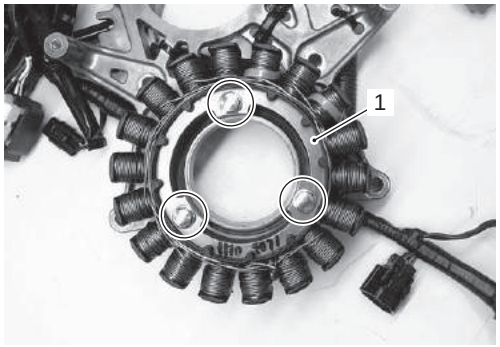

IDK1111B0074-01

- Install CKP sensor (2), then tighten sensor mounting screws securely.

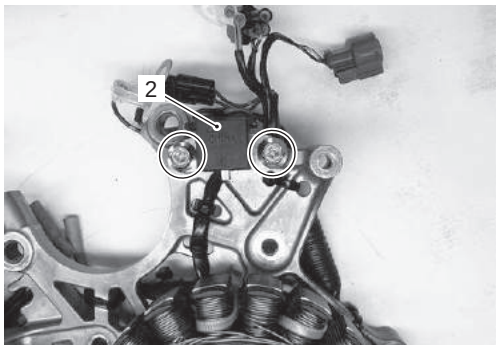

IDK1111B0075-01

Stator base

- Install two dowel pins (1) in position.

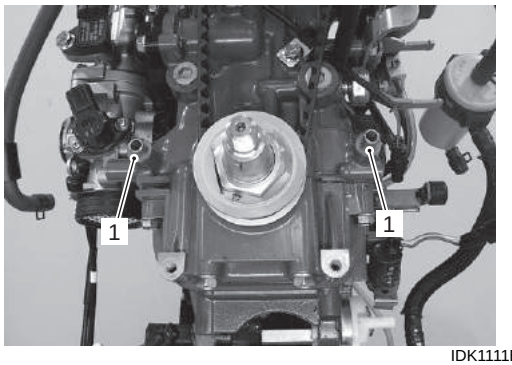

IDK1111B0076-01

- Install stator base, then tighten stator base mounting bolts securely.

Tightening torque
Stator base bolt [6 mm] (a): 10 N·m (1.0 kgf-m, 7.2 lbf-ft)

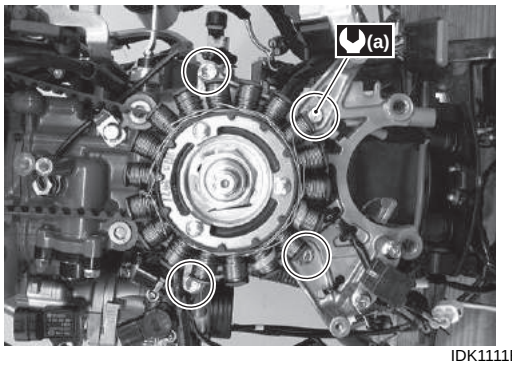

IDK1111B0077-01

Wiring

- Connect the lead wire connectors to each sensor and actuator.
- Tighten the anode cover bolt securely.

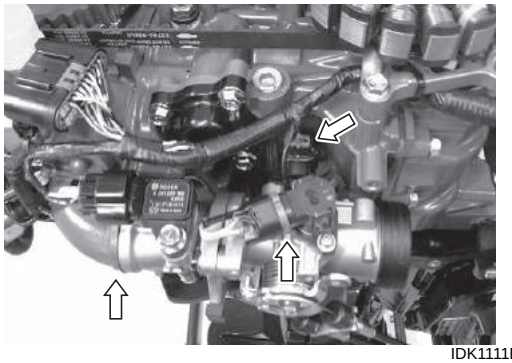

IDK1111B0078-01

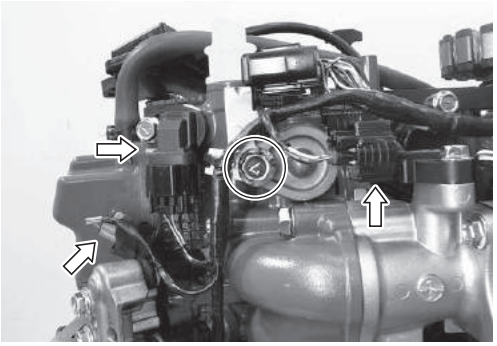

IDK1111B0079-01

- Install the air intake silencer case.
  Refer to “Air Intake Silencer Case Removal and Installation” in Section 1D (Page 1D-3).

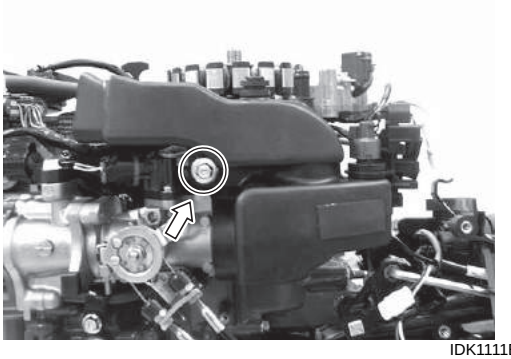

IDK1111B0080-01

- Install the electric parts holder (1), then tighten it with bolts (2).
  Tighten the harness GND lead wire with bolt (3).

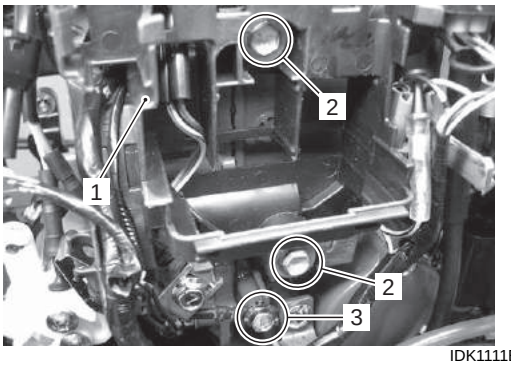

IDK1111B0081-01

- Connect the lead wire connectors to the Ignition coil and the high pressure fuel pump.
- Install ECM in position.

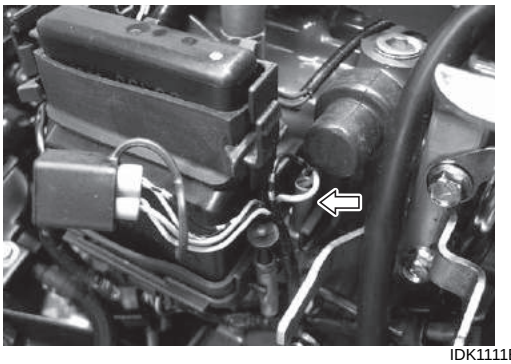

IDK1111B0082-01

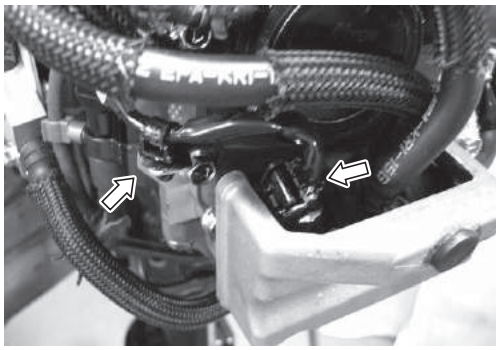

IDK1111B0083-01

Flywheel

- Install flywheel and tighten flywheel nut to specified torque.
  Refer to “Flywheel Removal and Installation” (Page 1K-4).

  Special tool
  TOOL (A): 09930–39520 (Flywheel holder)

  Tightening torque
  Flywheel nut (a): 90 N·m (9.0 kgf-m, 65 lbf-ft)

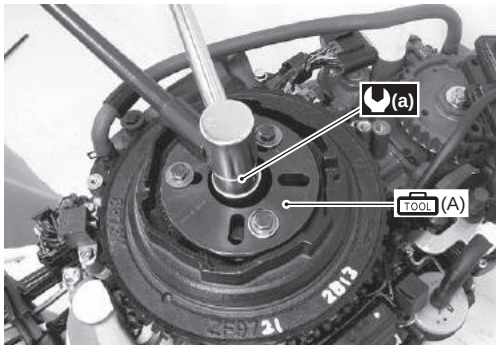

IDK1111B0056-01

Final assembly check

Perform the following checks to ensure proper and safe operation.

- All parts removed have been returned to their original positions.
- Wire routing match’s service manual illustration.
  For wire routing, refer to “Wiring Harness Routing Diagram” in Section 4A (Page 4A-3).
- Check that wiring harness / lead wire are routed properly and away from hot or rotating parts.

Battery Charge Coil Inspection

CENDK1111B06005

Electric Starter Model:

Measure battery charge coil resistance in the following procedure.

1) Disconnect battery charge coil leads from rectifier / regulator.
2) Measure resistance between leads in the combinations shown.
   If measurement exceeds specification, replace battery charge coil.

   Special tool
   TOOL : 09930–99320 (Digital tester)

   Tester knob indication
   Resistance (Ω)

Battery charge coil resistance

Terminal for tester probe connection	Resistance
Y1 to Y2	0.7 – 1.1 Ω
Y2 to Y3	
Y3 to Y1	

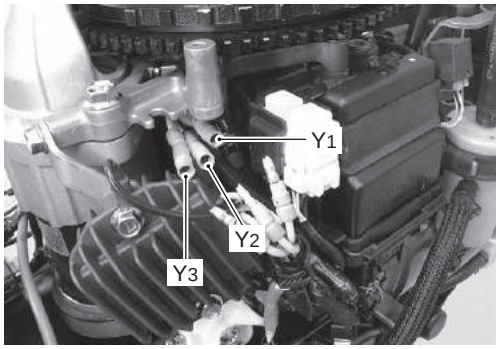

IDK1111B0084-01

3) Connect battery charge coil leads to rectifier / regulator.

Manual Starter Model:

Measure battery charge coil resistance in the following procedure.

1) Disconnect battery charge coil lead wires from rectifier / regulator (if it is connected).
2) Connect the tester probe to battery charge coil lead wires as shown.
   If measurement exceeds specification, replace battery charge coil.

   Special tool
   TOOL : 09930–99320 (Digital tester)

   Tester knob indication
   Resistance (Ω)

Tester prove connection	
Prove	**Other prove**
Pink	Yellow

   Battery charge coil resistance (for manual starter models)
   Standard: 0.5 – 0.8 Ω

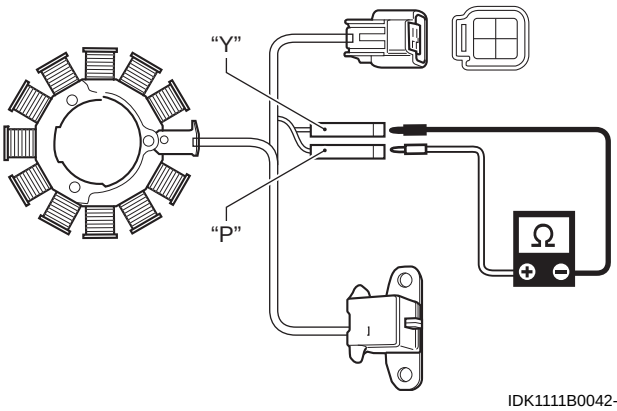

IDK1111B0042-02

Rectifier / Regulator Removal and Installation

CENDK1111B06006

Removal

⚠ CAUTION

Failure to take proper precaution when removing electrical parts may result in personal injury and/or damage to electronic components.

Prior to removing electrical parts, disconnect battery cables from battery.

1) Remove PORT lower side cover.
   Refer to "Lower Side Cover Removal and Installation" in Section 2A (Page 2A-2).
2) Disconnect all lead wires connectors from rectifier and regulator.

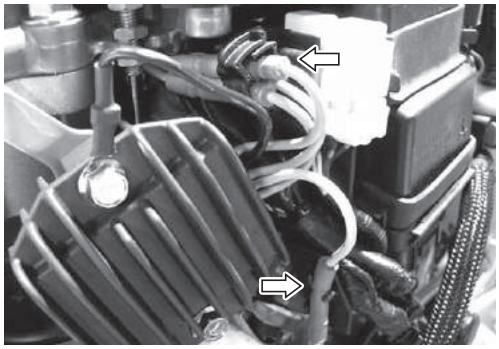

IDK1111B0043-01

3) Remove the bolts (1) and rectifier / regulator (2).

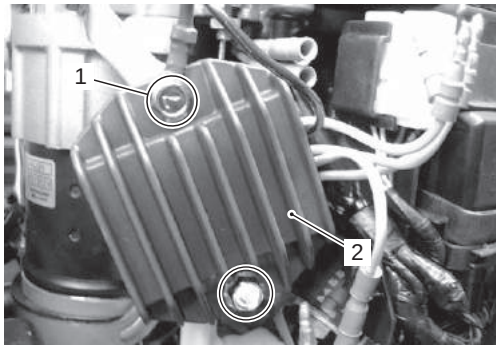

IDK1111B0044-01

Installation

1) Install rectifier / regulator (1), then tighten bolts (2) securely.
2) Connect lead wire connector to rectifier / regulator. Check that lead wire routed properly.

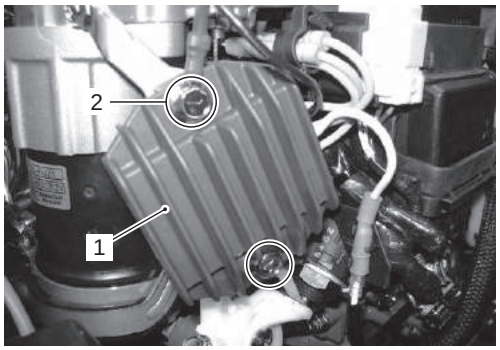

IDK1111B0046-01

Rectifier / Regulator Inspection

CENDK1111B06007

Inspect the rectifier / regulator in the following procedures:

1) Remove the rectifier / regulator.
   Refer to “Rectifier / Regulator Removal and Installation” (Page 1K-15).
2) Measure resistance between leads in the combinations shown.
   If measurement exceeds specification, replace rectifier / regulator.

NOTE

The values given below are for a SUZUKI pocket tester.
As thyristors, diodes, etc. are used inside this rectifier / regulator, the resistance values will differ when an ohmmeter other than SUZUKI pocket tester is used.

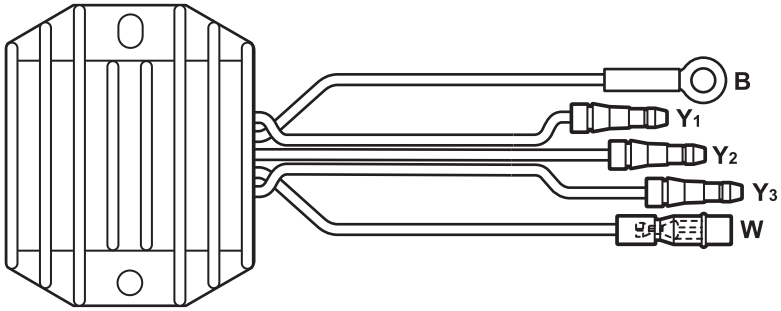

IDK1111B0003-02

Special tool
TOOL : 09900–25010 (Pocket tester)

Tester knob indication
Resistance (x 1 kΩ)

Rectifier and Regulator Resistance

Unit: Approx. kΩ

	Tester probe (+) (Red) connection					
Tester probe (–) (Black) connection	—	B	W	Y1	Y2	Y3
	B	—	0.85 – 17	0.85 – 8.5	0.85 – 8.5	0.85 – 8.5
	W	∞	—	∞	∞	∞
	Y1	∞	0.85 – 8.5	—	∞	∞
	Y2	∞	0.85 – 8.5	∞	—	∞
	Y3	∞	0.85 – 8.5	∞	∞	—

IDK1111B0004-02

Battery Relay Inspection

CENDK1111B06011

Inspect the battery relay using the following procedures:

1) Disconnect lead wire connector from ECM (1), then remove ECM.

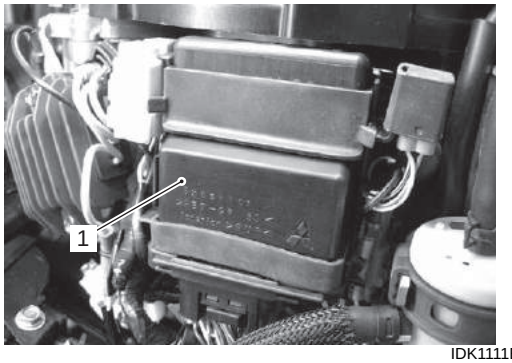

IDK1111B0047-01

2) Pull out the battery relay and relay cover (2) from electric parts holder.
3) Remove the relay cover (3), then disconnect the battery relay (4) from the lead wire connector.

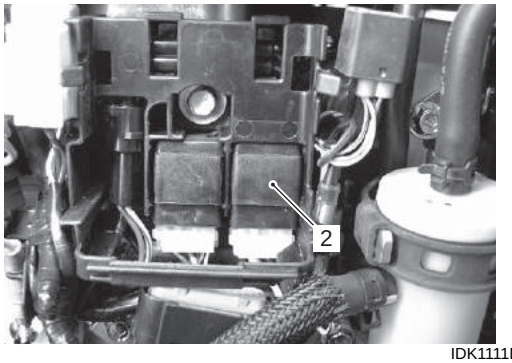

IDK1111B0048-01

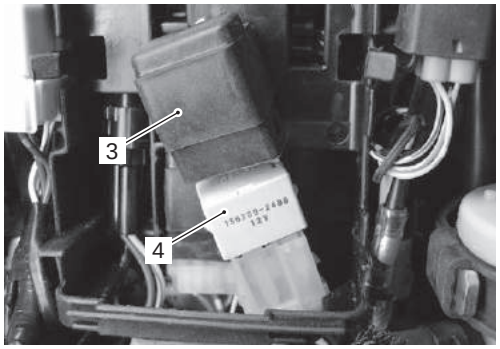

IDK1111B0049-01

4) Check continuity between terminal (5) and (6) each time 12 V power supply is applied to terminal (7) and (8).
   Connect the positive (+) lead to terminal (8), and negative (–) lead to terminal (7).

NOTICE

If the 12 V power supply wire is connected to wrong terminal or touched to each other, the power supply wire, tester may be damaged.

Be careful not to touch 12 V power supply wires to each other or with other terminals.

Special tool
TOOL : 09930–99320 (Digital tester)

Tester knob indication
Continuity (•))))

Battery relay function

	Continuity
12 V power applied	Yes
12 V power not applied	No

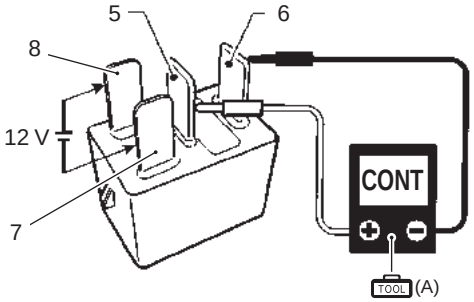

IDK1111B0005-01

5) Measure the resistance between relay terminals (7) and (8).
   If out of specification, replace battery relay.

Tester knob indication
Resistance (Ω)

Battery relay solenoid coil resistance
Standard: 145 – 190 Ω

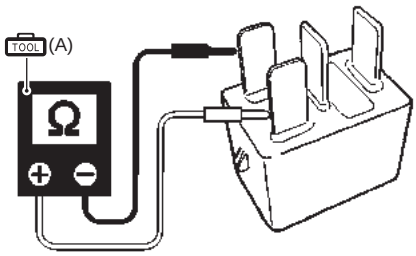

IDK1111B0006-01

6) Reinstall parts removed earlier.

Fuse Inspection

CENDK1111B06008

Inspect the fuse in the following procedures.

1) Remove the fuse from fuse case (1).
2) Inspect continuity between both terminal of fuse.
   If no continuity is indicated, replace fuse.

Special tool
TOOL : 09930–99320 (Digital tester)

Tester knob indication
Continuity (•))))

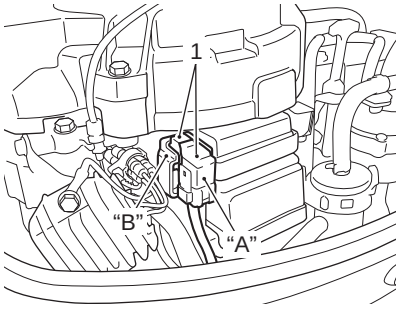

IDK1111B0050-01

"A":	Main fuse 30A (White fuse case)
"B":	ECM fuse (Yellow fuse case)

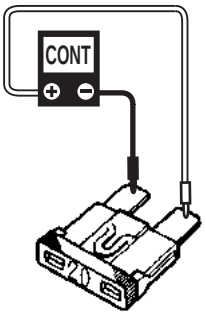

IAJ3111B0029-01

Section 2

Mid Unit

CONTENTS

Precautions

Precautions

Precaution for Mid Unit

CENDK1112000001

Refer to “General Precautions” in Section 00 (Page 00-1).

Housing and Bracket

Precautions

Precaution for Housing and Bracket

CENDK1112100001

NOTE

When dismantling housing and bracket, inspect mountings and bolts for damage and wear. Replace if necessary.

Service Instructions

Lower Side Cover Components

CENDK1112106001

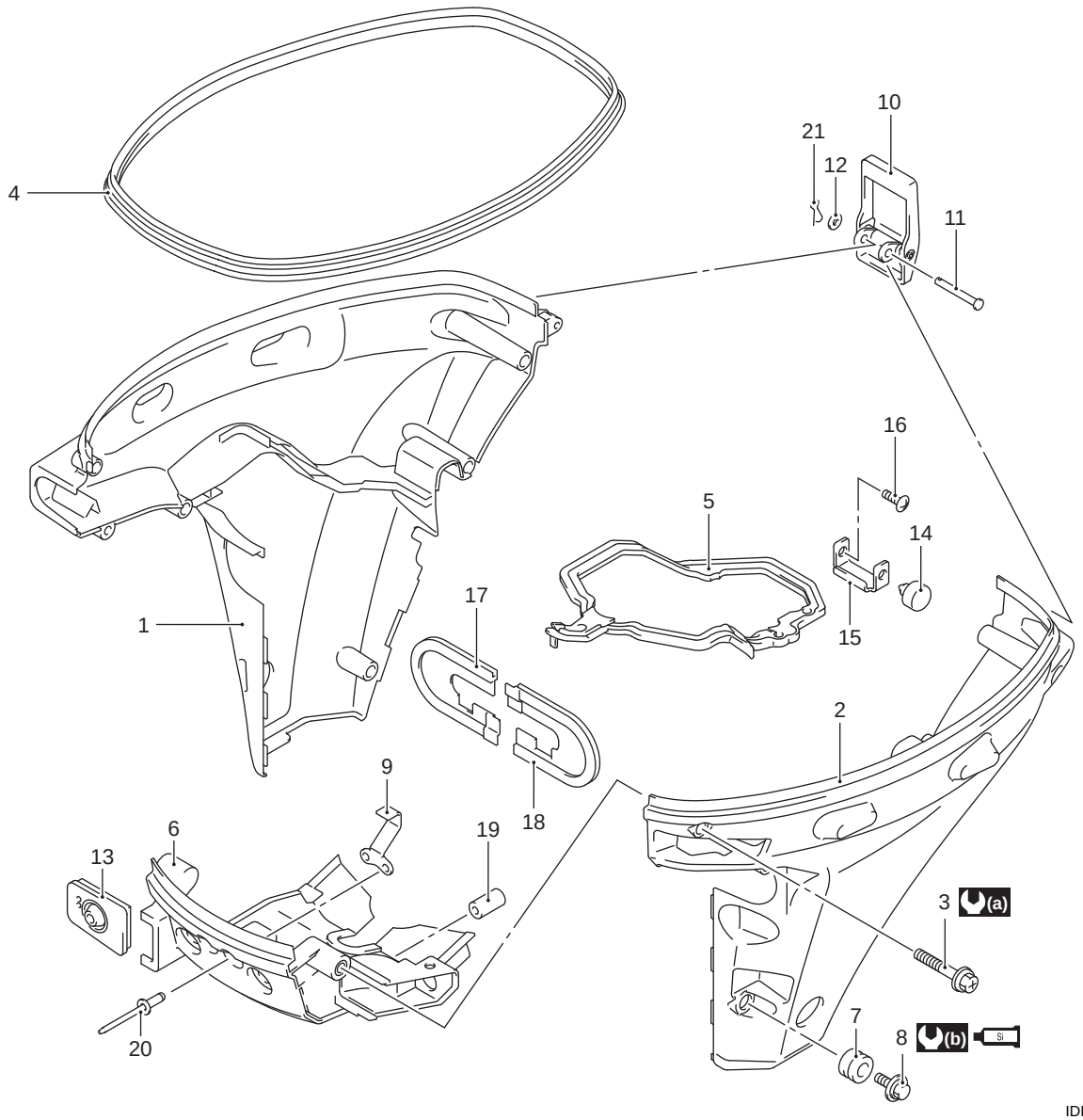

IDK111210024-06

1. Lower side cover STBD	7. Cushion	13. Cable grommet	19. Cushion
2. Lower side cover PORT	8. Screw	14. Cushion	20. Revet
3. Screw	9. Hook	15. Holder	21. Clip
4. Side cover rubber	10. Fastener	16. Screw	(a) : 5 N·m (0.5 kgf-m, 3.6 lbf-ft)
5. Side cover seal	11. Pin	17. Upper mount seal STBD	(b) : 5 N·m (0.5 kgf-m, 3.6 lbf-ft)
6. Front panel	12. Washer	18. Upper mount seal PORT	Si : Apply SUZUKI Silicone seal

Lower Side Cover Removal and Installation

CENDK1112106002

Removal

1) Remove the side cover rubber (1).

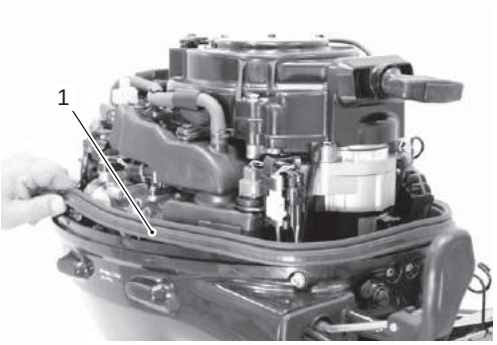

IDK111210025-01

2) Remove the snap pin (2), washer (3), pin (4) and fastener (5).

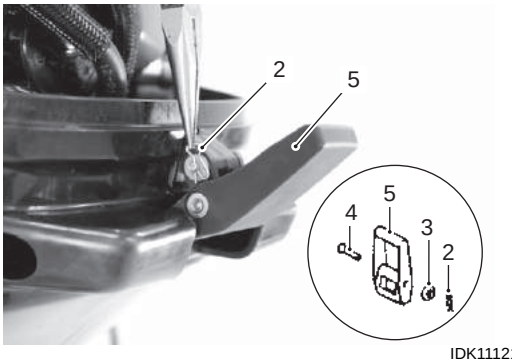

IDK111210026-01

3) Remove the seven screws (6) and STBD side cover (7).

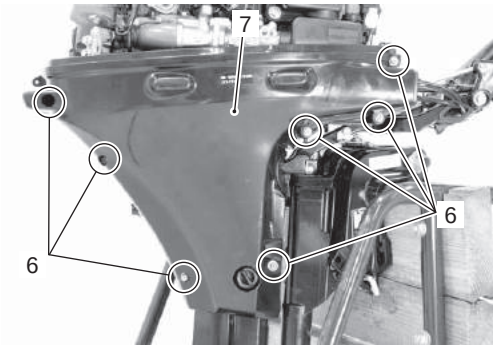

IDK111210027-01

4) Remove three screws (8) and PORT lower side cover (9).

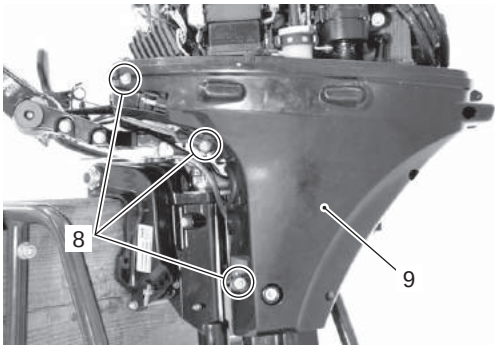

IDK111210028-01

Installation

Installation is reverse order of removal with special attention to the following step.

NOTE

Apply sealant to the two screws “A” of the side cover screw only.

Si : Sealant 93691–80030 (SUZUKI Silicone Seal (100 g))

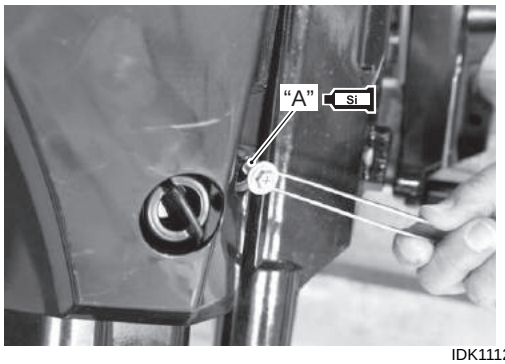

IDK111210029-01

- Tighten side cover screws to specified torque.

Tightening torque
Side cover screw: 5 N·m (0.5 kgf-m, 3.6 lbf-ft)

Tiller Handle and Handle Bracket Removal and Installation

CENDK1112106003

Removal

1) Remove both lower side covers.
   Refer to “Lower Side Cover Removal and Installation” (Page 2A-2).
2) Disconnect the stop switch lead wire connector (1). Cut the cable tie (2) binding the stop switch lead wire.

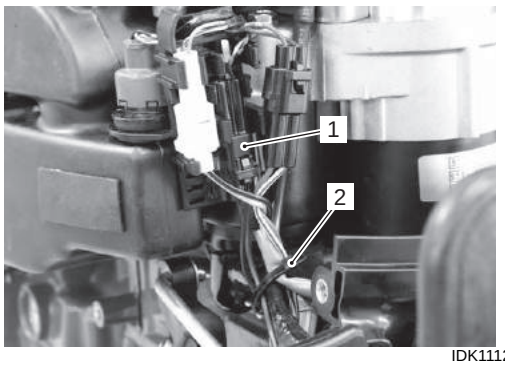

IDK111210030-01

3) Loosen the bolt (3) securing shift lever (4).
Remove the bolt (3), shift lever (4), washer (5), washer (6), wave washers (7) and spacer (8).

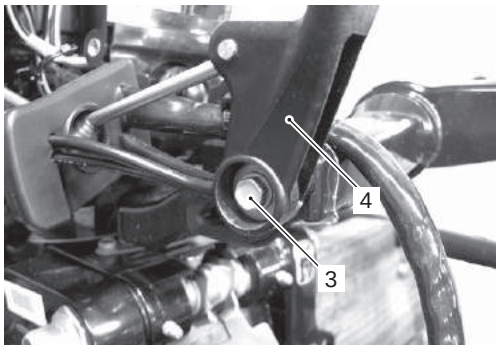

IDK111210017-01

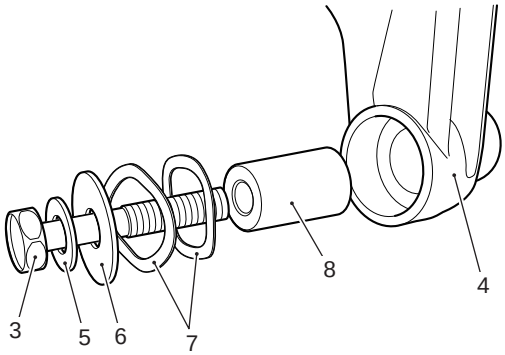

IDK111210023-01

4) Loosen the throttle cable lock nuts (9).
Remove the throttle cables (10) from throttle drum and cable bracket.

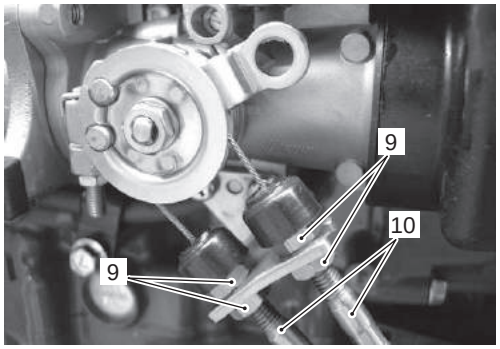

IDK111210018-02

5) Loosen the cable clamp (11) and remove the battery cable (12) from handle bracket.

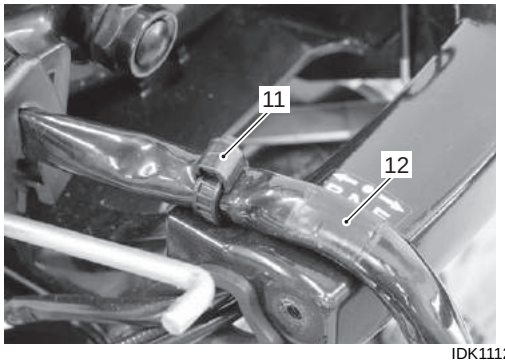

IDK111210031-02

6) Remove the bolts (13) securing handle bracket to steering bracket.
Remove the tiller handle and handle bracket assembly.

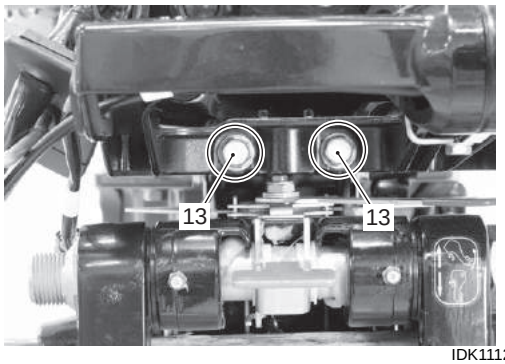

IDK111210022-02

7) Remove the bolts (14) and tiller handle cover (15).
Remove the tiller handle (16) and cable assembly.

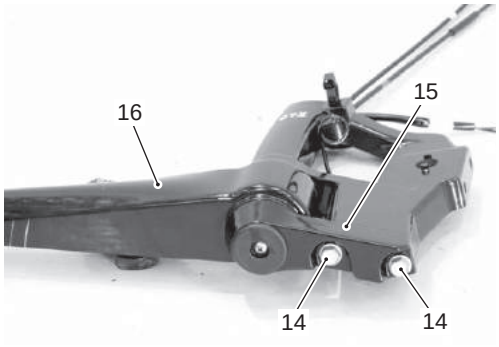

IDK111210032-01

Installation

Installation is reverse order of removal with special attention to the following steps.

Tiller handle

- Place bush (1), friction rubber (2) and bush (3) on tiller handle.

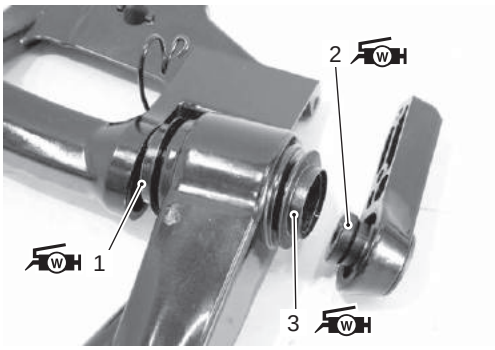

IDK111210033-03

- Install the tiller handle (4) and handle cover (5).

NOTE

Before installing tiller handle cover, check that lead wire and cable routing properly.

- Tighten handle cover bolts to the specified torque.

Tightening torque
Tiller handle bolt (a): 23 N·m (2.3 kgf-m, 16.5 lbf-ft)

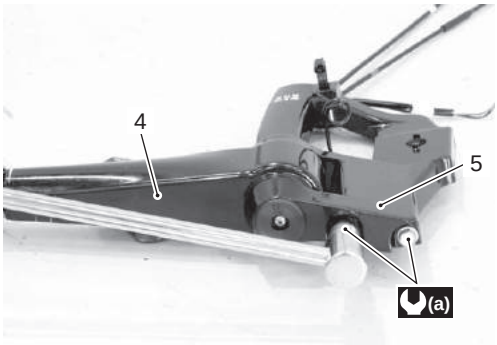

IDK111210034-02

Handle bracket

- Install the handle bracket and tiller handle assembly (1).
- Tighten handle bracket bolt, pre-coated with thread lock, to the specified torque.

Tightening torque
Tiller handle bracket bolt (a): 23 N·m (2.3 kgf-m, 16.5 lbf-ft)

1342 : Thread lock cement 99000–32050 (SUZUKI Thread Lock 1342 (50 g))

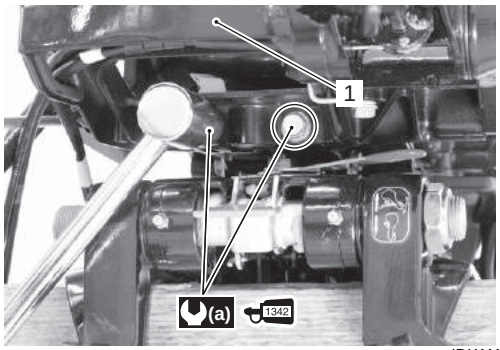

IDK111210035-01

Throttle cables

- Install the throttle cables (1) to throttle drum and cable bracket (2), then tighten nuts (3) securely.
- Adjust of throttle control cable.
  Refer to “Throttle Control Cable Installation and Adjustment” (Page 2A-5).

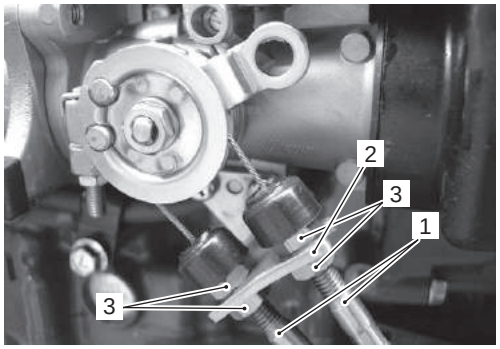

IDK111210020-02

Final assembly check

- Perform the following final assembly checks to ensure proper and safe operation of the repaired unit.
  - All parts removed have been returned to their original positions.
  - Wire routing matches service manual illustration. Refer to “Wiring Harness Routing Diagram” in Section 4A (Page 4A-3).

Throttle Control Cable Installation and Adjustment

CENDK1112106004

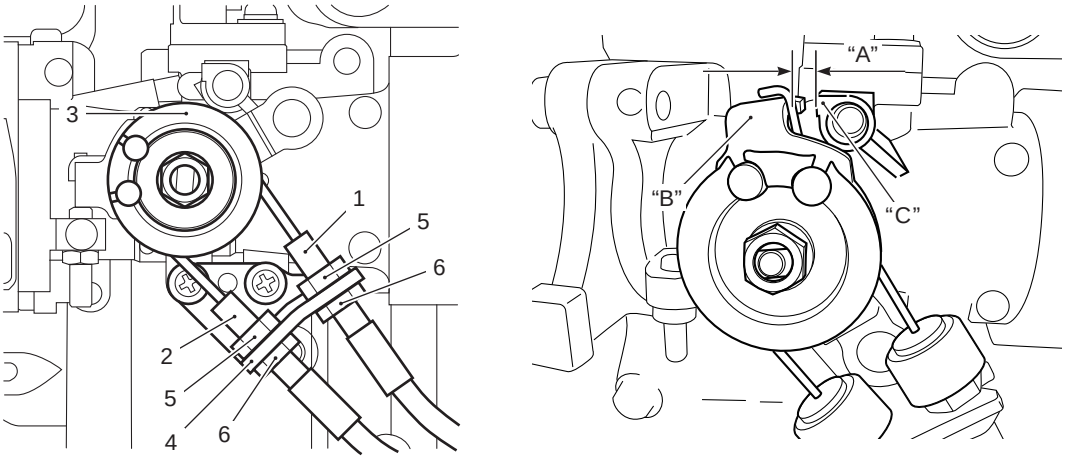

IDK111210021-03

"A": Clearance (Max. 2.5 mm)	"B": Lever	"C": Stopper

1) Turn the throttle control grip its completely closed position.
2) Fit two throttle control cables, (1) and (2) both to the throttle drum (3) and cable holder (4).
3) Temporarily tighten the cable lock nut (5) and (6).
4) Check cable for tension.
   If cable is too tight or too loose, adjust it by adjusting lock nut.
5) Secure the throttle control cable (1) and (2) on the cable holder by tightening lock nuts.
6) Make sure the clearance "A" exists between the lever "B" and the stopper "C" with throttle control fully opened.
   If not, adjust again.
7) Operate the throttle control grip and check that the throttle valve opens and closes completely without interference.

NOTE

If the throttle valve does not operate smoothly or open/close completely, check for the throttle cable routing or inner cable tension.

Steering Friction Adjuster Disassembly and Assembly

CENDK1112106005

Disassembly

Removal

1) Remove both lower side covers.
   Refer to "Lower Side Cover Removal and Installation" (Page 2A-2).
2) Remove the two bolts (1) securing handle bracket.

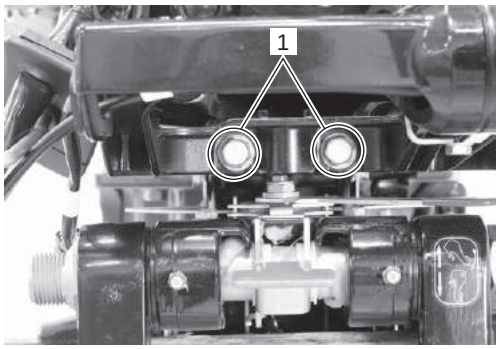

IDK111210036-01

3) Remove the two bolts (2) securing steering adjuster plate (3).
Remove the two bolts (4) securing steering adjuster base plate (5).

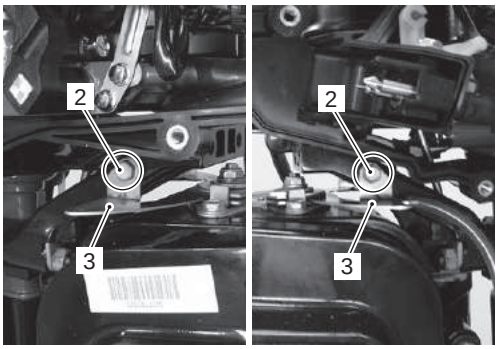

IDK111210037-01

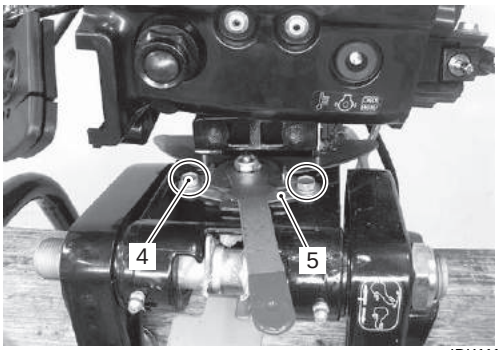

IDK111210038-01

4) Remove the steering friction adjuster assembly (6).

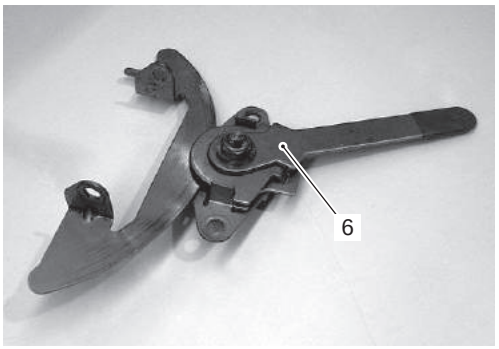

IDK111210039-01

Disassembly

1) Remove the steering adjuster plate (1).

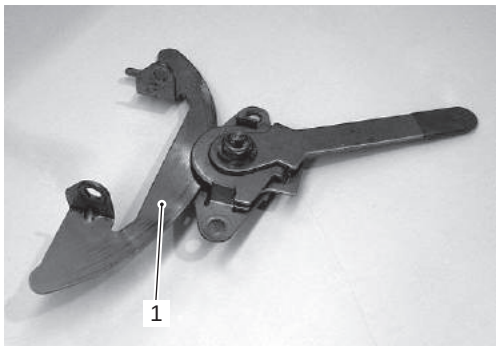

IDK111210040-01

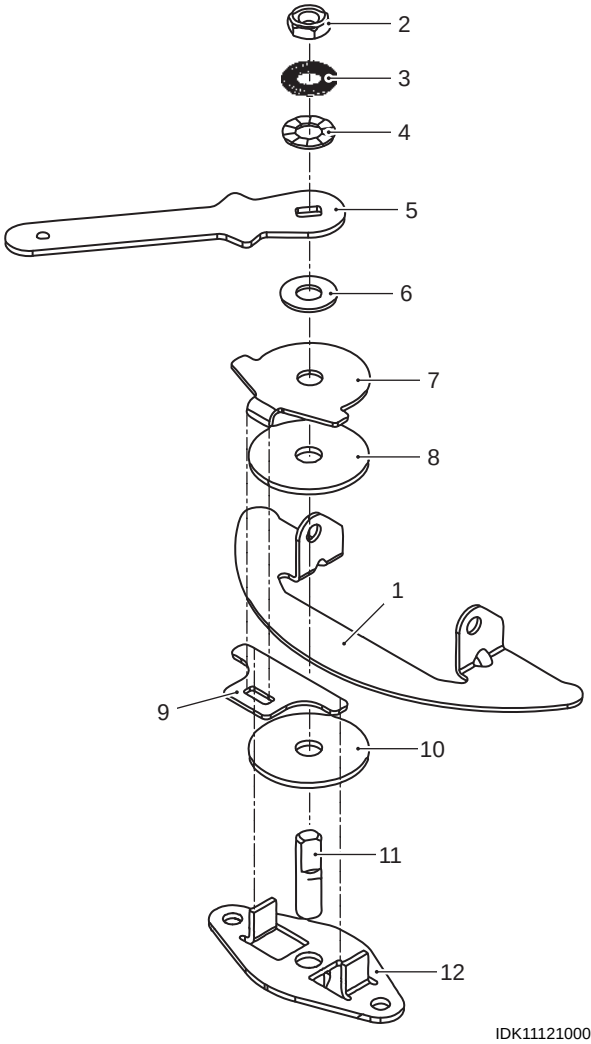

IDK111210003-02

2) Remove the friction adjuster nut (2), washer (3), washer (4) and adjuster lever (5).
3) Remove the washer (6) and upper plate (7).
4) Remove the friction washer (8) and spacer (9).
5) Remove the friction washer (10).
Loosen and remove the shaft (11) from adjuster base plate (12).

Assembly
Assemble the steering friction adjuster set in the following sequence:

Reassembly

1) Thread the shaft (1) to the adjuster base plate (2) as shown in the figure.

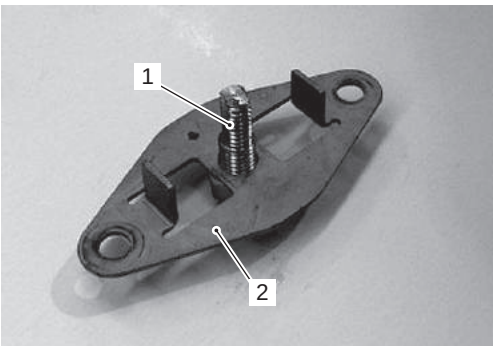

IDK111210041-01

2) Install the friction washer (3), spacer (4) and friction washer (5).

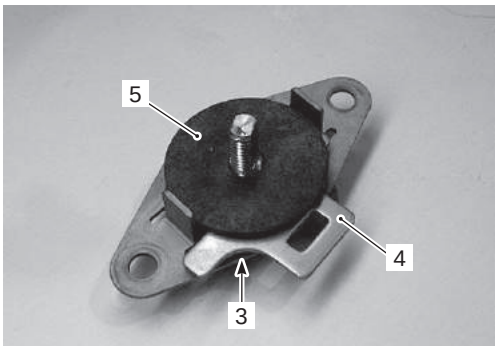

IDK111210042-01

3) Install the upper plate (6) and washer (7).

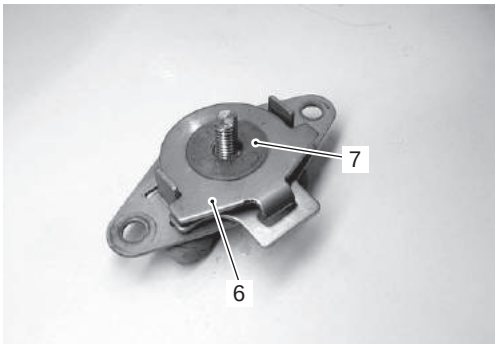

IDK111210043-01

4) Install the steering adjuster lever (8), washer (9) and washer (10).

NOTE

When install the washer (9) and (10), put rough face of each washer together.

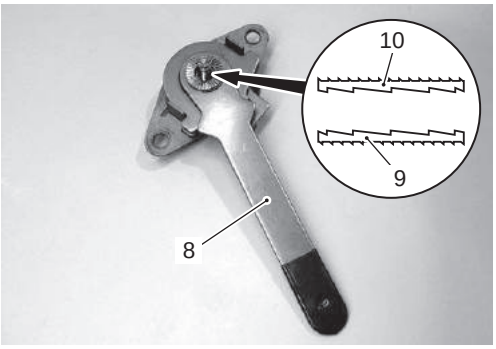

IDK111210044-01

5) Place the steering adjuster plate (11) between the friction washer (3) and (5).

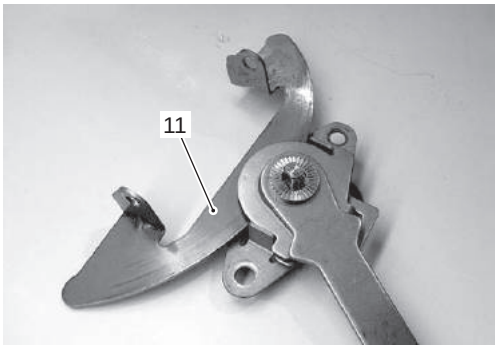

IDK111210045-02

6) Install the friction adjuster nut (12).
Move the steering adjuster lever to fully left position.
Tighten the friction adjuster nut (12) to specified torque.

Tightening torque
Steering friction adjuster nut (a): 9 N·m (0.9 kgf-m, 6.5 lbf-ft)

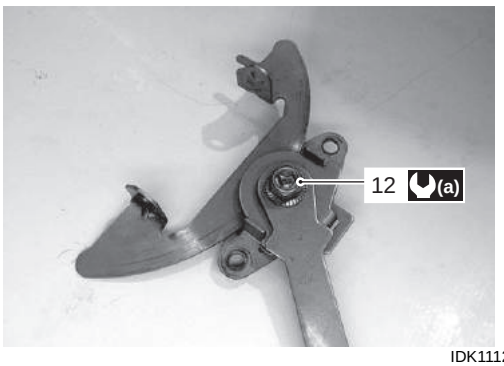

IDK111210046-01

Installation

1) Place the steering friction adjuster assembly into position.
2) Apply Thread Lock 1342 to the threads of adjuster mounting bolts before threading it.
3) Temporarily tighten all mounting bolts.
4) Tighten the bolts (1) to specified torque.

   Tightening torque
   Bolt (a): 10 N·m (1.0 kgf-m, 7.2 lbf-ft)

5) Move the steering adjuster lever to fully left position. Tighten the bolt (2) and, next, tighten bolt (3) to specified torque.

   Tightening torque
   Bolt (b): 10 N·m (1.0 kgf-m, 7.2 lbf-ft)

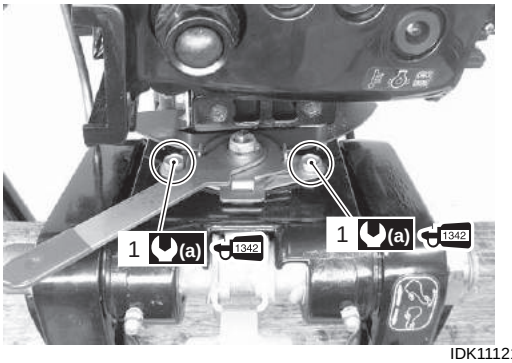

IDK111210047-01

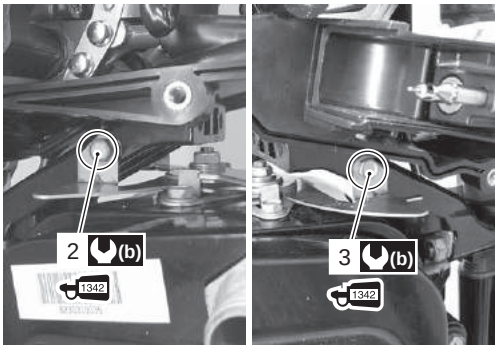

IDK111210048-01

6) Install the handle bracket.
   Refer to “Tiller Handle and Handle Bracket Removal and Installation” (Page 2A-2).

Tiller Handle Components

CENDK1112106006

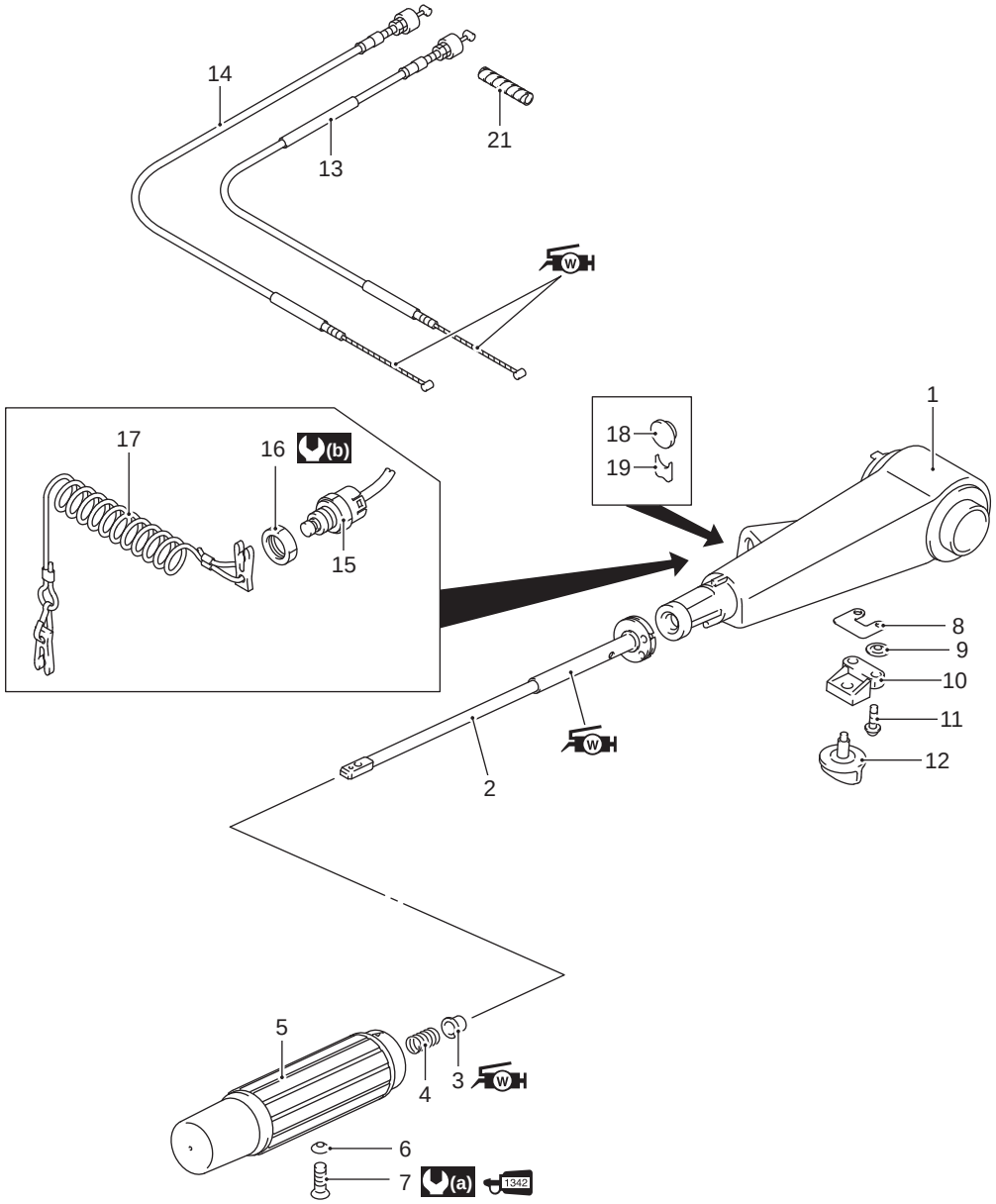

IDK111210049-01

1. Tiller handle	7. Screw	13. Throttle cable	19. Plate
2. handle rod	8. Plate	14. Throttle cable	(a) : 3 N·m (0.3 kgf-m, 2.1 lbf-ft)
3. Bush	9. Nut	15. Emergency / Stop switch	(b) : 1.8 N·m (0.18 kgf-m, 1.3 lbf-ft)
4. Spring	10. Support	16. Nut	W : Apply SUZUKI water resistance grease.
5. Handle grip	11. Screw	17. Lock plate	1342 : Apply SUZUKI thread lock 1342.
6. Lock washer	12. Knob	18. Cap	

Tiller Handle Disassembly and Assembly

CENDK1112106007

Disassembly

1) Remove the screw (1) and throttle grip (2).

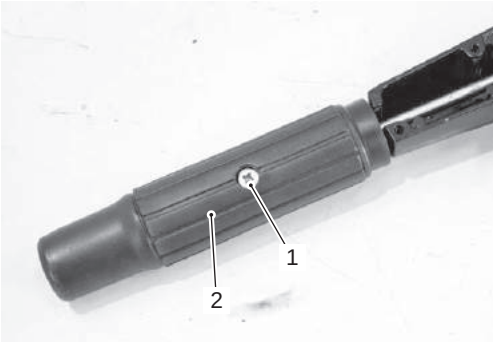

IDK111210050-01

2) Remove the screw (3), throttle adjuster knob (4) and lower plate (5).

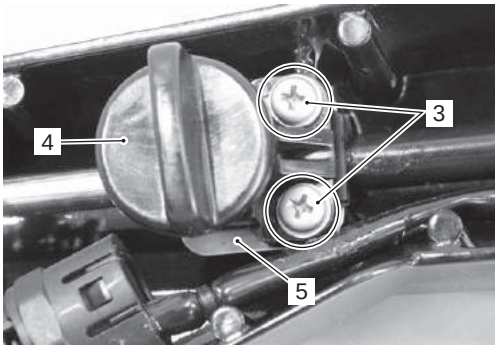

IDK111210051-01

3) Remove the spring (6) and bush (7) from handle rod.

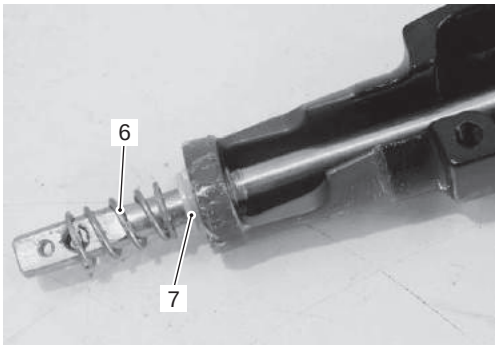

IDK111210052-01

4) Remove the handle rod (8) and throttle cable assembly.
Remove the throttle cables (9) from throttle rod.

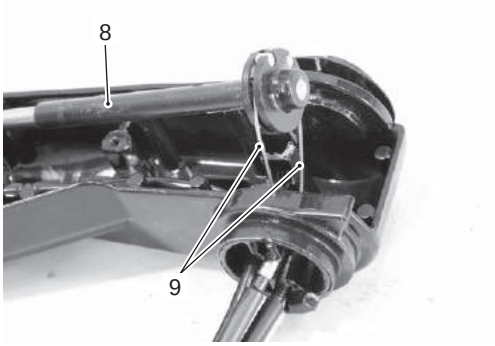

IDK111210053-01

Assembly

Assembly is in the reverse order of disassembly with special attention to the following steps.
Reassemble the tiler handle, refer to “Tiller Handle Components” (Page 2A-9).

1) Install the throttle cables (1) to throttle rod.

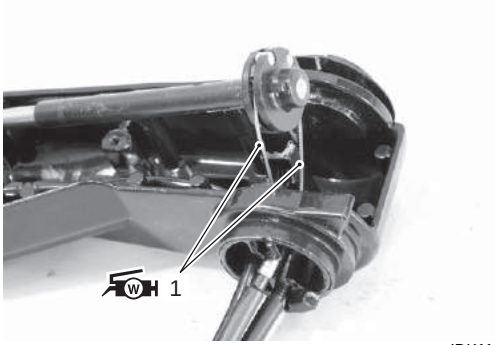

IDK111210054-01

2) Place the throttle rod/cable assembly into position.

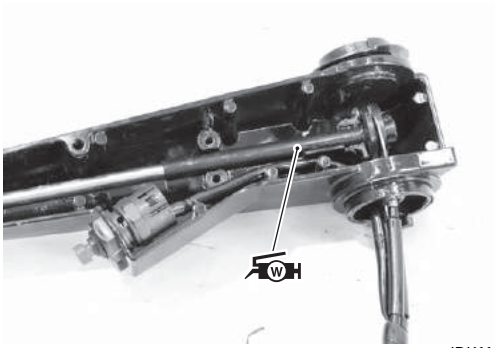

IDK111210055-01

3) Insert the bush (3) to tiller handle and install spring (4) to handle rod.

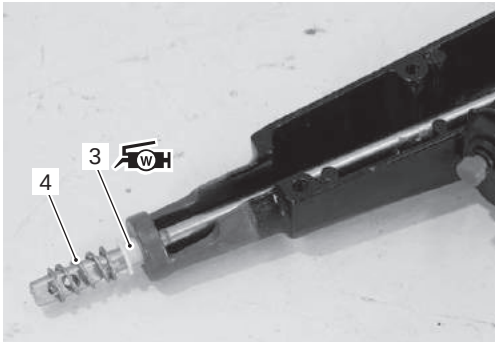

IDK111210056-01

4) Install the lower plate (5), throttle adjuster knob (6), then securely tighten it with screws.

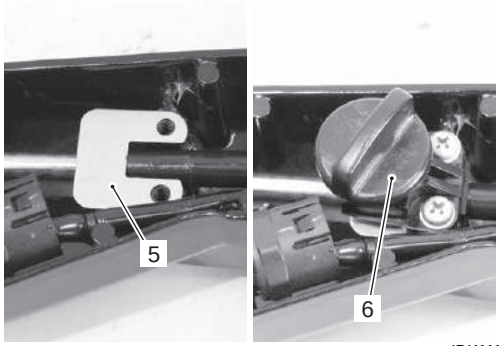

IDK111210058-01

5) Install the throttle grip (7), then tighten screw (8), pre-coated with thread lock, to specified torque.

Tightening torque
Throttle grip screw (a): 3 N·m (0.3 kgf-m, 2.1 lbf-ft)

1342 : Thread lock cement 99000–32050 (SUZUKI Thread Lock 1342 (50 g))

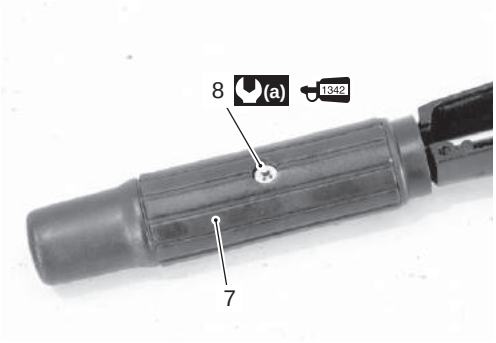

IDK111210059-01

Engine Holder / Driveshaft Housing / Mounts Components

CENDK1112106008

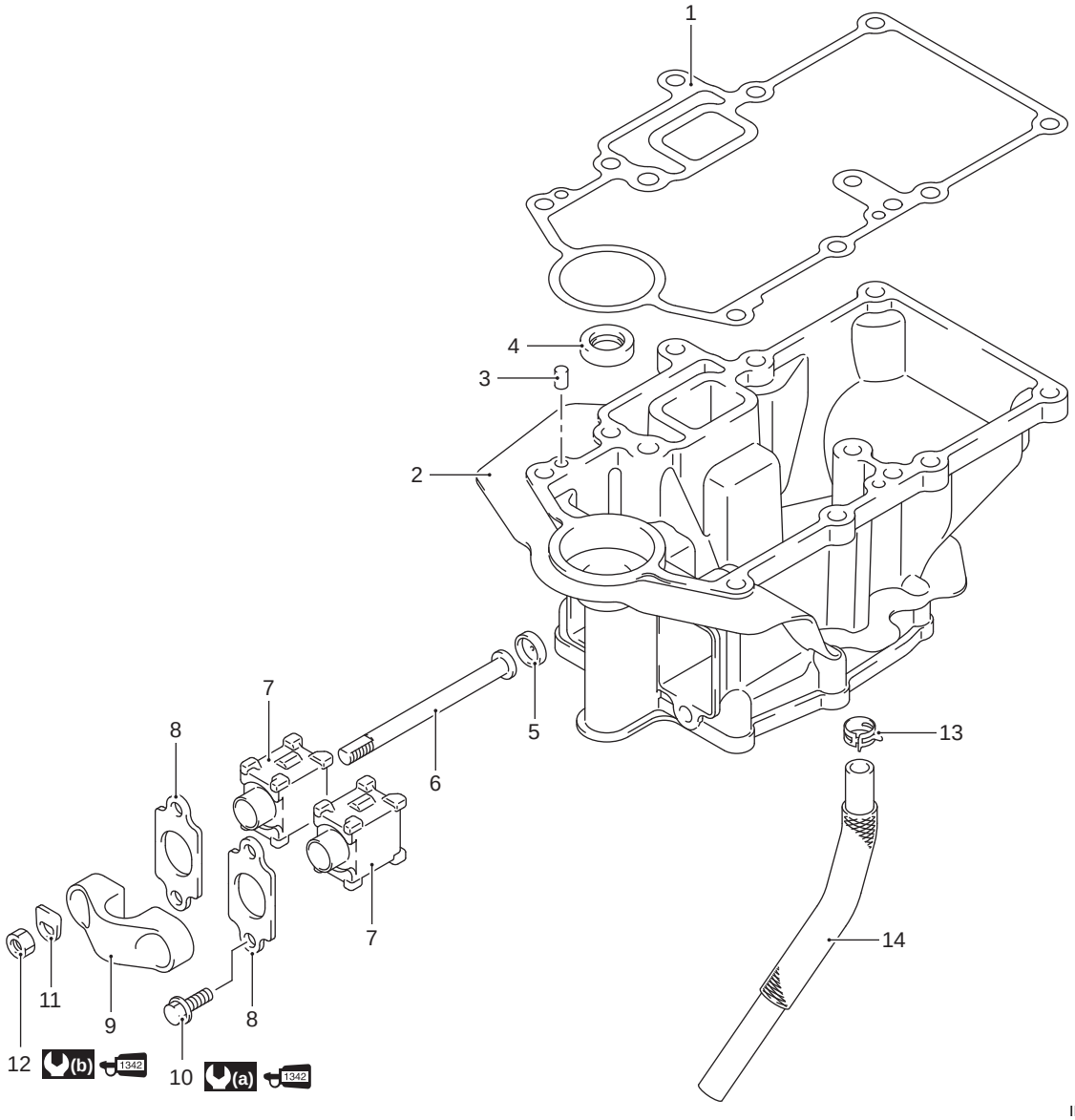

IDK111210060-02

1. Gasket	6. Upper mount bolt	11. Washer	(b) : 35 N·m (3.5 kgf-m, 25.0 lbf-ft)
2. Engine holder	7. Upper mount	12. Upper mount nut	1342 : Apply SUZUKI thread lock 1342.
3. Dowel pin	8. Mount cover	13. Clip	
4. Driveshaft upper oil seal	9. Upper side mount	14. Oil hose	
5. Thrust stopper	10. Bolt	(a) : 23 N·m (2.3 kgf-m, 16.5 lbf-ft)	

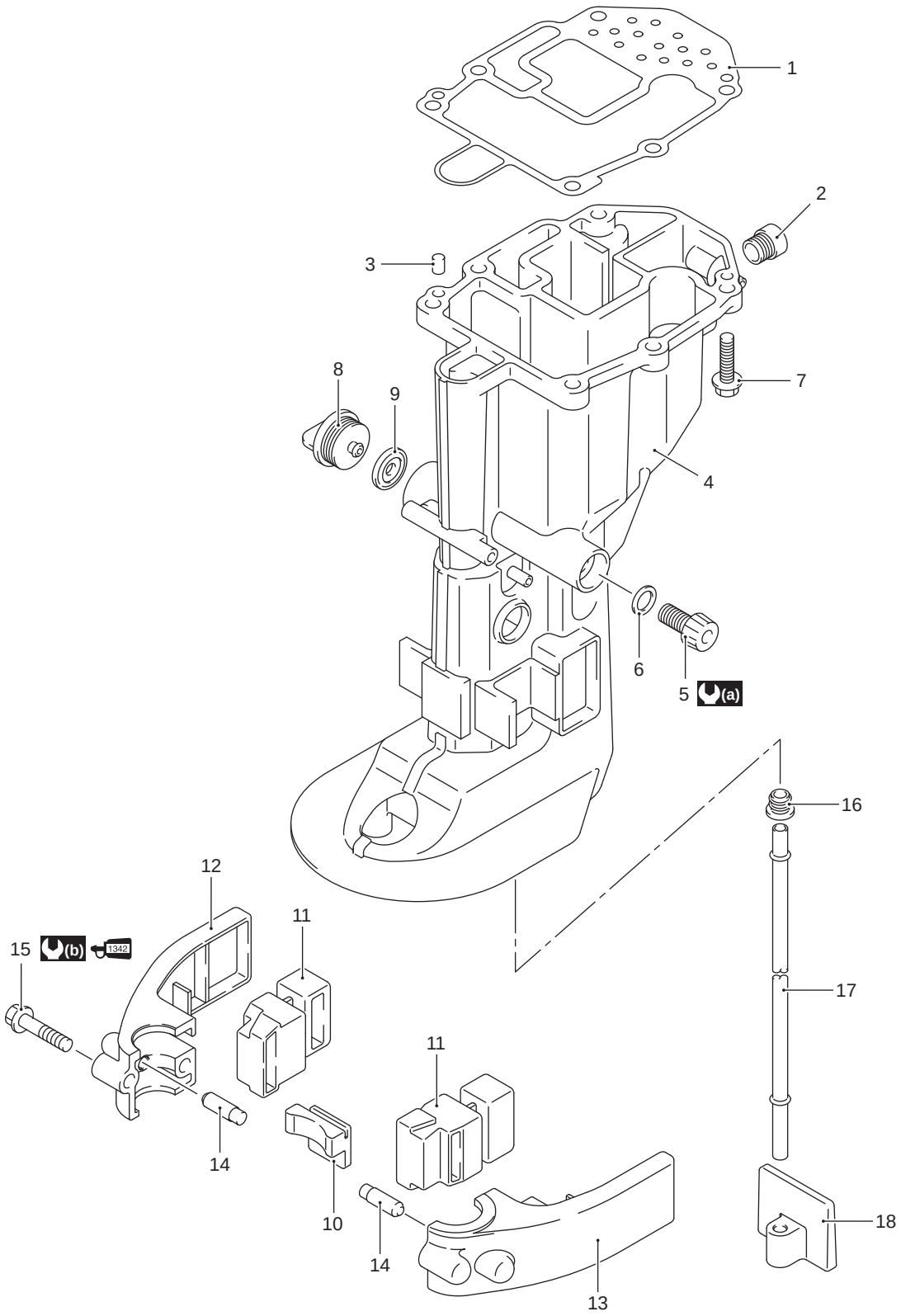

IDK111210061-01

1. Gasket	7. Bolt	13. Lower mount cover PORT	(a) : 13 N·m (1.3 kgf-m, 9.5 lbf-ft)
2. Exhaust pipe	8. Water plug	14. Pin	(b) : 23 N·m (2.3 kgf-m, 16.5 lbf-ft)
3. Dowel pin	9. Gasket	15. Lower mount cover bolt	1342 : Apply SUZUKI thread lock 1342.
4. Driveshaft housing	10. Lower thrust mount	16. Grommet	
5. Oil drain plug	11. Lower side mount	17. Water tube	
6. Gasket	12. Lower mount cover STBD	18. Water tube guide	

Engine Holder / Driveshaft Housing / Mounts Disassembly

CENDK1112106009

1) Remove the power unit.
   Refer to “Power Unit Removal and Installation” in Section 1D (Page 1D-8).
2) Remove the lower unit.
   Refer to “Lower Unit Removal and Installation” in Section 3A (Page 3A-5).
3) Remove the side cover seal (1).

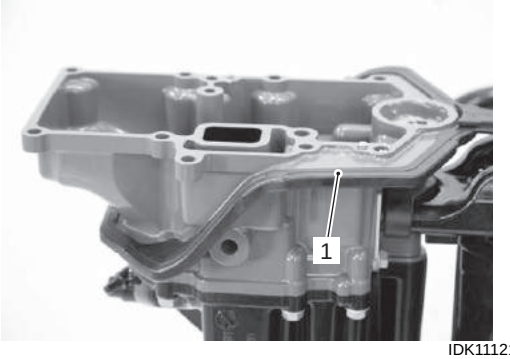

IDK111210062-01

4) Remove the two bolts (2) securing PORT/ STBD lower mount covers.

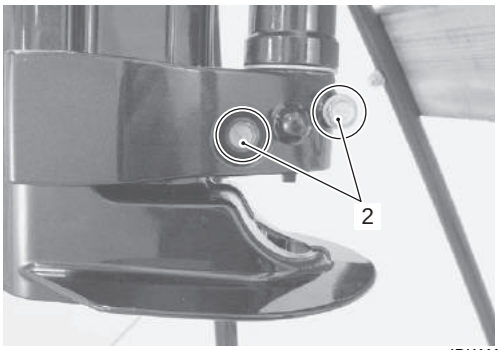

IDK111210004-01

5) Remove the STBD lower mount cover (3), lower side mount (4) and lower thrust mount (5).

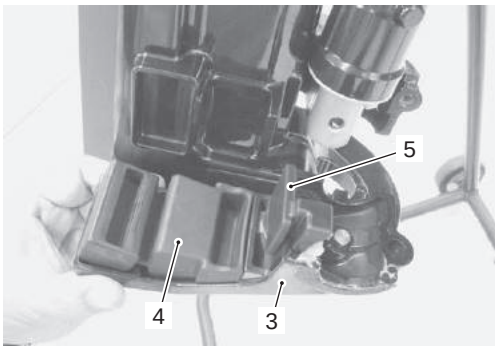

IDK111210005-01

6) Remove the PORT lower mount cover (6), lower side mount (7) and pilot shaft washer (8).

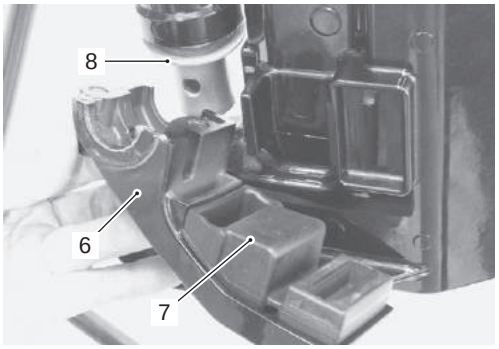

IDK111210006-01

7) On PORT/STBD both sides:
   Remove the bolts (9) securing upper mount covers (10).

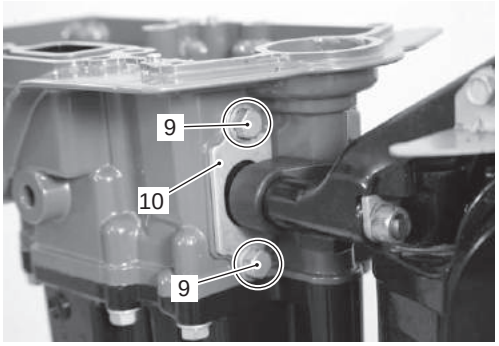

IDK111210063-01

8) Remove engine holder and driveshaft housing assembly.

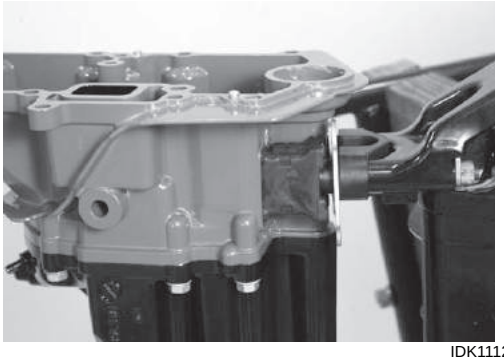

IDK111210064-01

9) Remove STBD/PORT upper mount nuts (11) and washers (12).

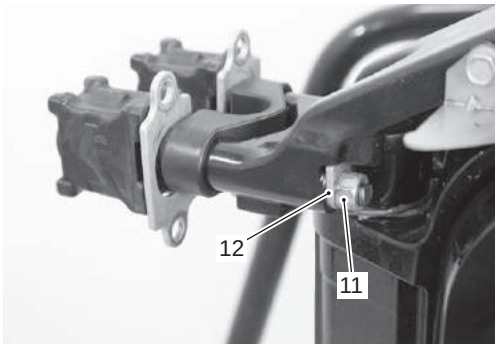

IDK111210065-01

10) Remove the upper mount bolts (13), upper mount cover (10), upper mount (14) and thrust stopper (15).

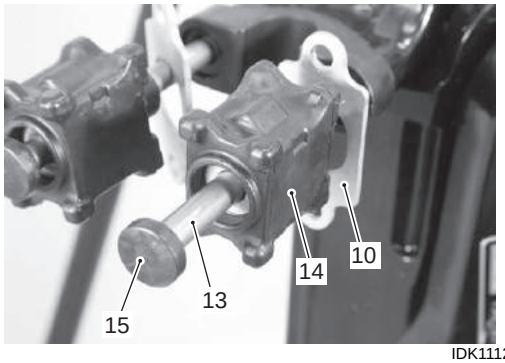

IDK111210066-01

11) Remove the upper side mount (16).

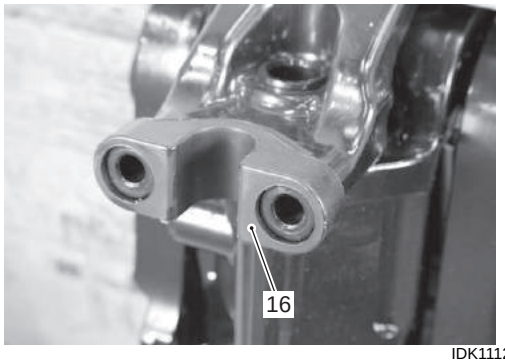

IDK111210008-02

12) Remove the six bolts and the engine holder (17) from the driveshaft housing.

IDK111210067-01

13) Loosen the clip securing oil hose (18), then remove the oil hose from engine holder.

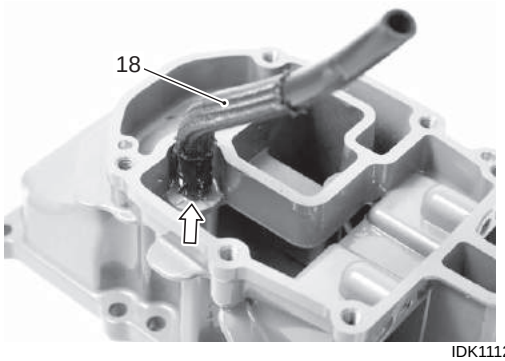

IDK111210068-01

14) Remove the water tube guide (19), water tube (20) and water tube grommet (21).

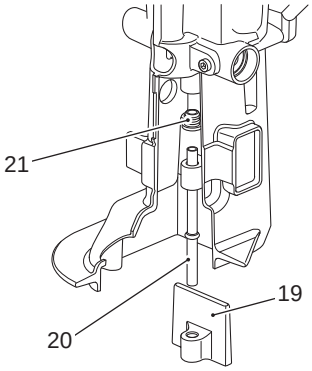

IDK111210012-01

Engine Holder / Driveshaft Housing / Mounts Assembly

CENDK1112106010

Assembly is in reverse order of disassembly with special attention to the following steps.

Engine Holder to Driveshaft Housing

- Apply water resistant grease to water tube grommet (1), then install the water tube grommet to driveshaft housing.

  : Grease 99000–25350 (SUZUKI Water Resistant Grease EP2 (250 g))

- Install the water tube (2) and water tube guide (3).

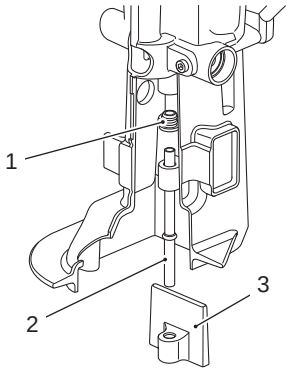

IAJ311210006-02

- Install the oil hose (4), then secure it with clip (5).

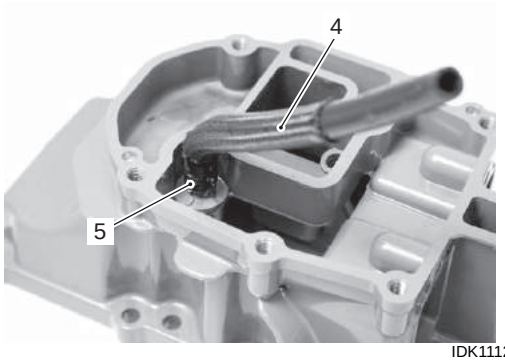

IDK111210069-01

- Install two dowel pins (6) and gasket (7) to driveshaft housing.

NOTICE

Previously used gasket may leak oil and/or cooling water, resulting in engine damage.

Do not reuse gasket. Always assemble with a new gasket.

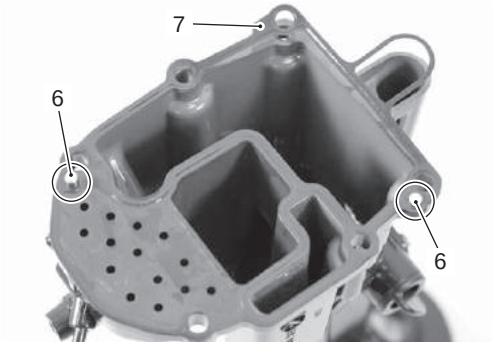

IDK111210070-01

- Install engine holder (8) to driveshaft housing (9). Apply engine oil to the driveshaft housing bolts (10) before threading it. Tighten driveshaft housing bolts to specified torque.

Tightening torque
Driveshaft housing bolt (a): 23 N·m (2.3 kgf-m, 16.5 lbf-ft)

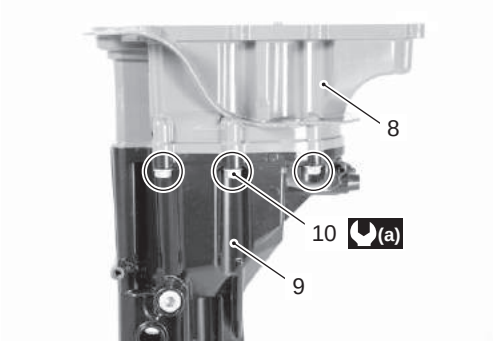

IDK111210071-01

Upper Mount

- Install the upper side mount (1).

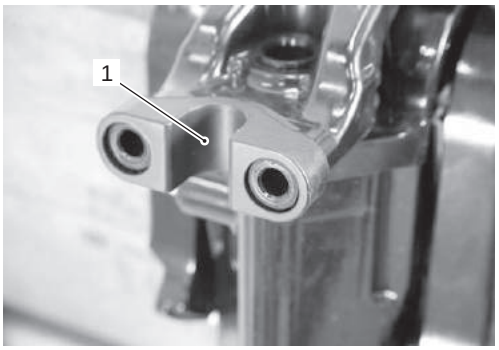

IDK111210072-01

- Assemble these items in the following sequence: Place the upper mount (2), upper mount cover (3) and thrust stopper (4) on upper mount bolts (5).

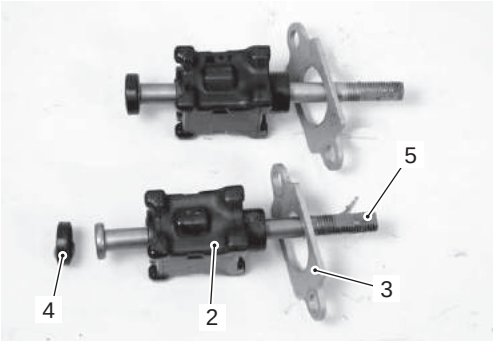

IDK111210073-01

- Place upper mount assembly into position.

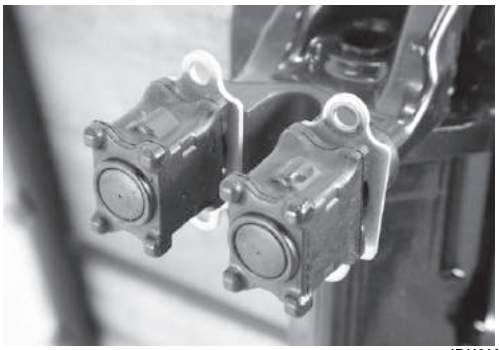

IDK111210074-01

- On PORT/STBD both sides:
  Install the washer (6) and upper mount nut (7), then tighten two nuts, pre-coated with thread lock, to specified torque.

Tightening torque
Upper mount nut (a): 35 N·m (3.5 kgf-m, 25.0 lbf-ft)

1342 : Thread lock cement 99000–32050 (SUZUKI Thread Lock 1342 (50 g))

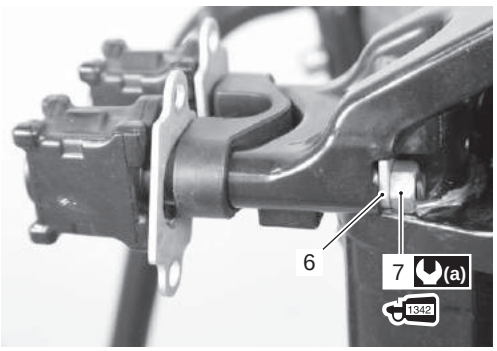

IDK111210075-01

Engine Holder and Driveshaft Housing

- Install the engine holder and driveshaft housing.
- Place the mount cover (1) into position, then tighten mount cover bolts (2), pre-coated with thread lock, to specified torque.

Tightening torque
Upper mount cover bolt (a): 23 N·m (2.3 kgf-m, 16.5 lbf-ft)

1342 : Thread lock cement 99000–32050 (SUZUKI Thread Lock 1342 (50 g))

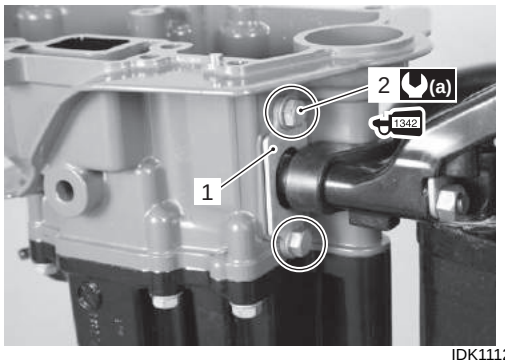

IDK111210076-01

Lower Mount and Lower Mount Cover

- Install the lower side mount (1), lower thrust mount (2) and pin (3) to PORT lower mount cover (4).

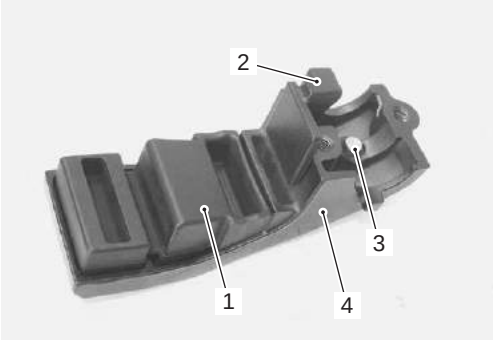

IAJ311210090-03

- Install the pilot shaft washer (5), then place PORT lower mount cover (with lower mount) to driveshaft housing and steering shaft.

NOTE

When attaching the lower mount cover to steering shaft, ensure that the retaining pin (3) properly fits into the hole “A” of steering shaft.

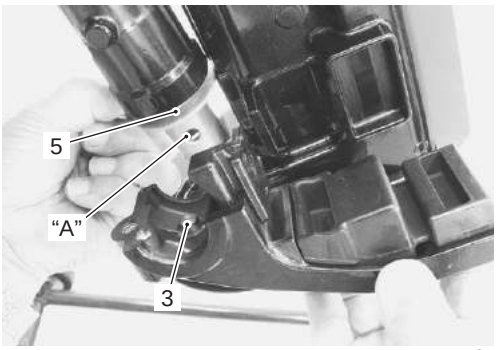

IAJ311210091-02

IAJ311210092-01

- Install the lower side mount (6), and pin (7) to STBD lower mount cover (8).

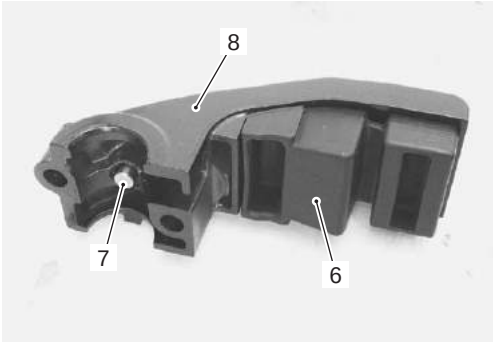

IAJ311210093-01

- Install STBD lower mount cover (with lower mount) to driveshaft housing and steering shaft.

NOTE

When attaching the lower mount cover to steering shaft, ensure that the retaining pin (7) properly fits into the hole “A” of steering shaft.

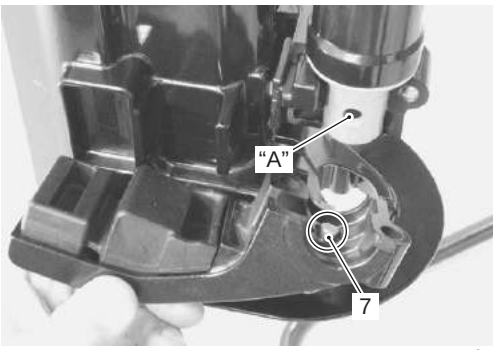

IAJ311210094-02

- Install the lower mount cover bolts, then tighten two bolts, pre-coated with thread lock, to specified torque.

Tightening torque
Lower mount cover bolt (a): 23 N·m (2.3 kgf-m, 16.5 lbf-ft)

1342 : Thread lock cement 99000–32050 (SUZUKI Thread Lock 1342 (50 g))

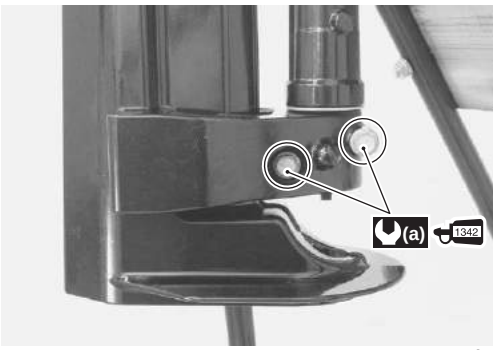

IAJ311210095-01

Engine Holder / Driveshaft Housing / Mounts Related Component Inspection

CENDK1112106011

Refer to “Engine Holder / Driveshaft Housing / Mounts Disassembly” (Page 2A-14) and “Engine Holder / Driveshaft Housing / Mounts Assembly” (Page 2A-15).

NOTE

If any component is found to be excessively worn, cracked, defective or damaged in any way, it must be replaced.

Engine Holder

- Inspect the engine holder. Replace if cracked, damaged, or other abnormal conditions are noted.
- Check water passage. If clogged or obstructed, clean water passage.

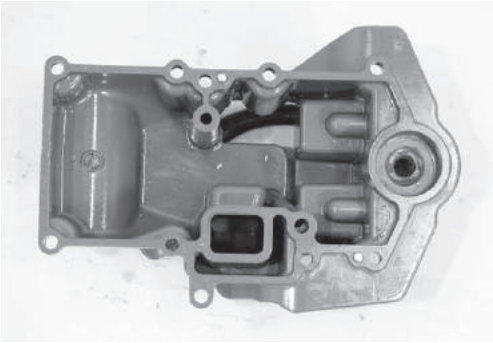

IDK111210077-01

Mount Cover

- Inspect the mount cover. Replace the mount cover if cracked, damaged or other abnormal conditions are found.

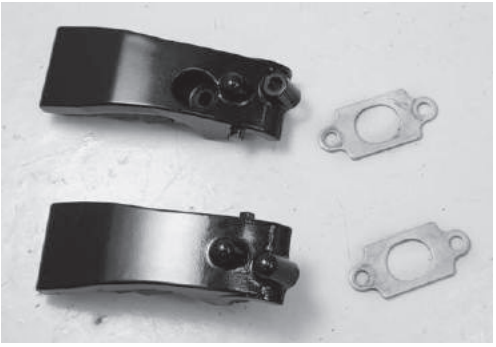

IDK111210078-01

Driveshaft Housing

- Check driveshaft housing.
  If cracks, defects or other damage is found, replace it.

IDK111210079-01

Mount

- Check upper, lower and thrust mounts.
  If excessive wear, corrosion or other damage is found, replace mount.
- Check mount bolts.
  If cracks, corrosion or other damage is found, replace bolt.

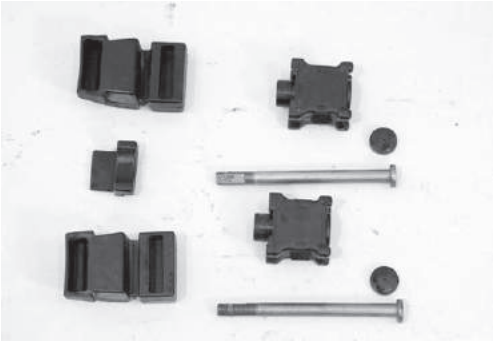

IDK111210080-01

Water Tube / Water Tube Grommet

- Check water tube.
  If a clog or obstruction is found, clean water tube.
  If cracks, corrosion or other damage is found, replace water tube.
- Check water tube grommet.
  If excessive wear or other damage is found, replace grommet.

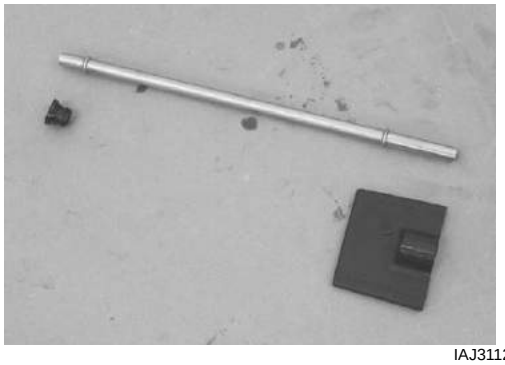

IAJ311210100-01

Driveshaft Upper Oil Seal Replacement

CENDK1112106012

1) Remove the engine holder.
   Refer to “Engine Holder / Driveshaft Housing / Mounts Disassembly” (Page 2A-14).
2) Extract oil seal with flat blade screw driver.

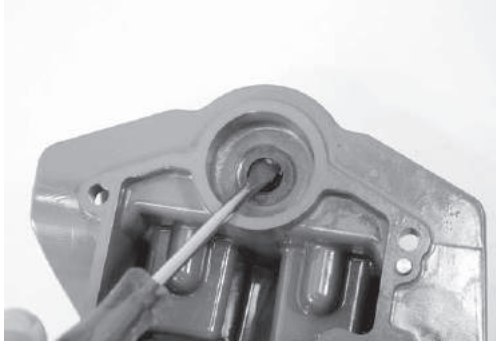

IDK111210081-01

3) Apply water resistant grease to outer circumference of oil seal.
4) Drive the oil seal into the engine holder.

NOTE

Install oil seal with lip (spring side) facing downward (oil pan side).

: Grease 99000–25350 (SUZUKI Water Resistant Grease EP2 (250 g))

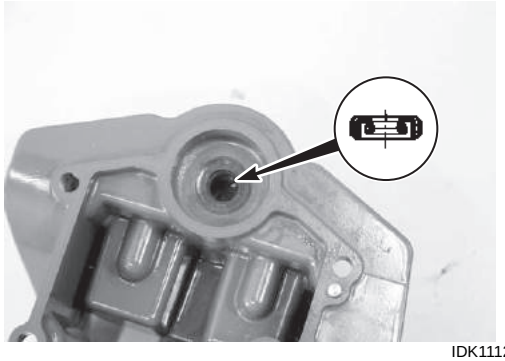

IDK111210082-01

5) Reassemble the engine holder.
   Refer to “Engine Holder / Driveshaft Housing / Mounts Assembly” (Page 2A-15).

Clamp / Swivel / Steering Brackets Components

CENDK1112106013

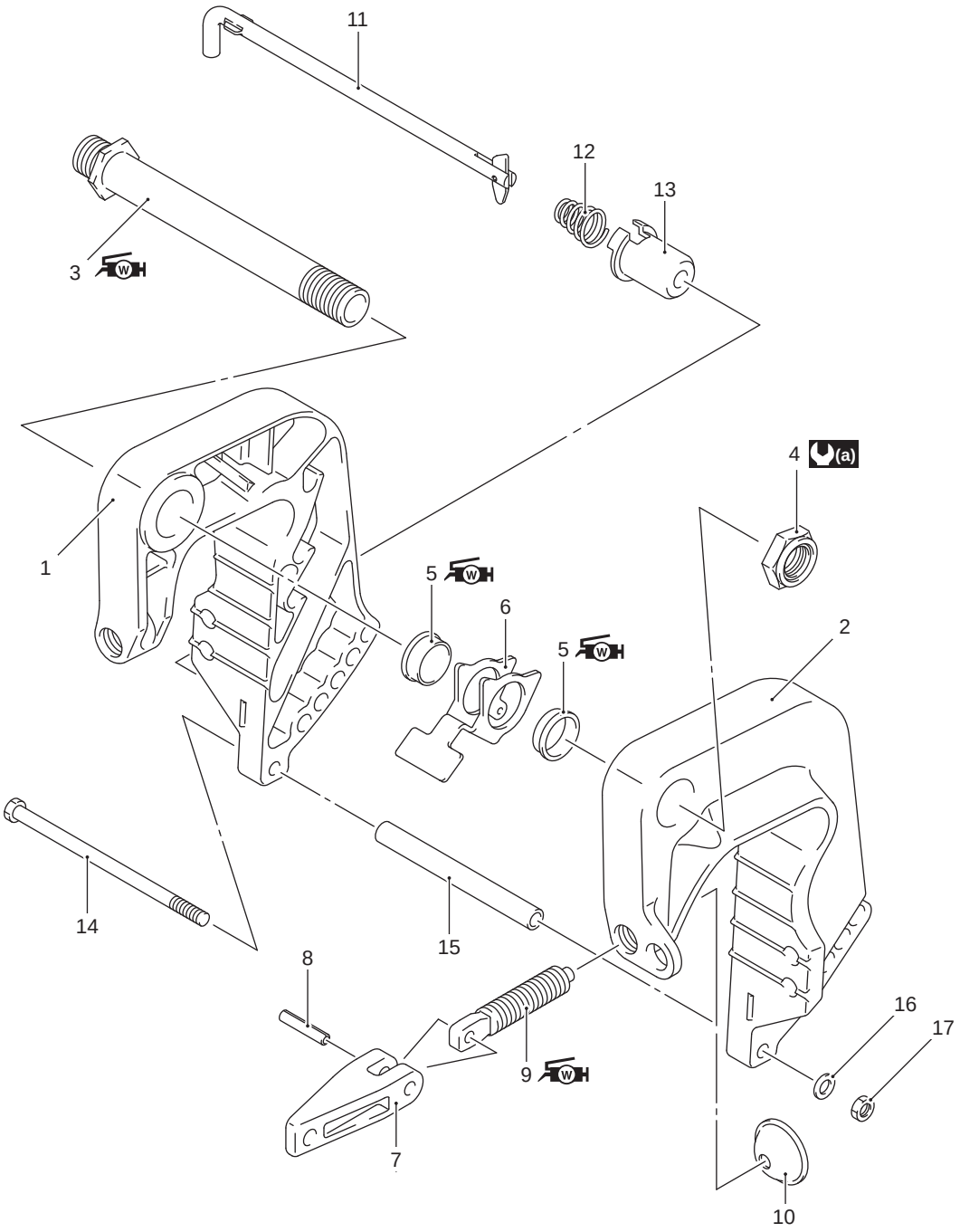

IDK111210013-03

1. Clamp bracket STBD	6. Release lever	11. Tilt pin	16. Washer
2. Clamp bracket PORT	7. Clamp handle	12. Spring	17. Nut
3. Clamp bracket shaft	8. Pin	13. Stopper	(a) : 43 N·m (4.3 kgf-m, 31.0 lbf-ft)
4. Nut	9. Clamp screw	14. Bolt	W : Apply SUZUKI water resistance grease.
5. Bush	10. Clamp plate	15. Spacer	1342 : Apply SUZUKI thread lock 1342.

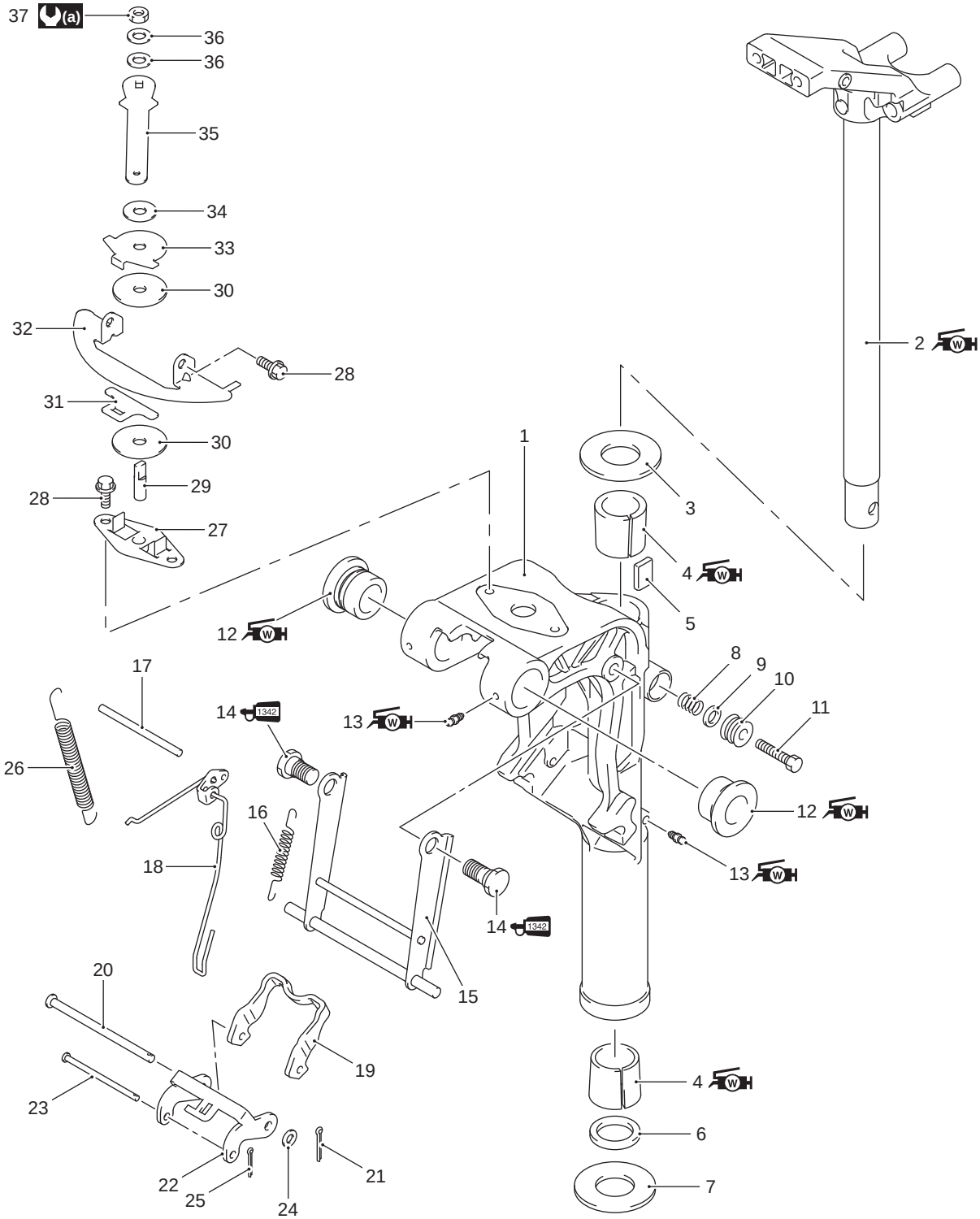

IDK111210014-03

1. Swivel bracket	11. Bolt	21. Cotter pin	31. Spacer
2. Steering bracket	12. Bush	22. Reverse lock arm link	32. Steering adjuster plate
3. Washer	13. Grease nipple	23. Pin	33. Upper plate
4. Bush	14. Bolt	24. Washer	34. Washer
5. Plate	15. Shallow drive arm	25. Pin	35. Adjuster lever
6. Seal	16. Spring	26. Spring	36. Washer
7. Washer	17. Pin	27. Friction plate	37. Nut
8. Spring	18. Release link	28. Bolt	(a) : 9 N·m (0.9 kgf-m, 6.5 lbf-ft)
9. Washer	19. Reverse lock arm	29. Shaft	W : Apply SUZUKI water resistance grease.
10. Cover	20. Pin	30. Washer	1342 : Apply SUZUKI thread lock 1342.

Clamp / Swivel / Steering Brackets Disassembly

CENDK1112106014

1) Remove engine holder / driveshaft housing.
   Refer to “Engine Holder / Driveshaft Housing / Mounts Disassembly” (Page 2A-14).
2) Remove the two bolts (1) and handle bracket (2).

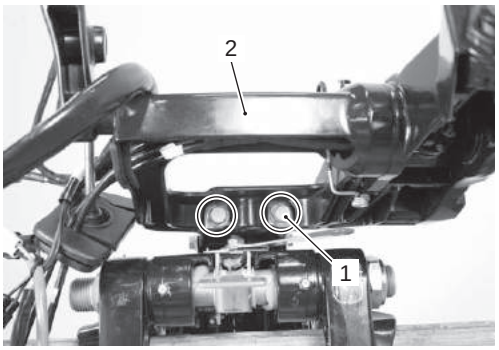

IDK111210083-01

3) Remove the bolts (3) and steering adjuster assembly (4).

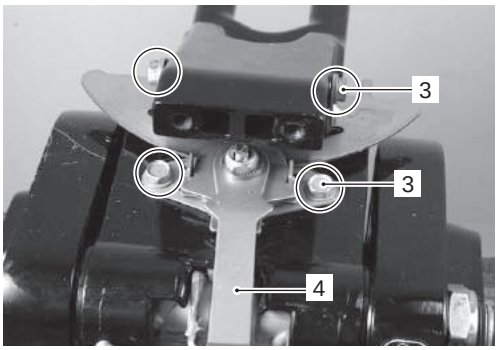

IDK111210084-01

4) Remove the steering adjuster bolt (5), cover (6), washer (7) and spring (8).

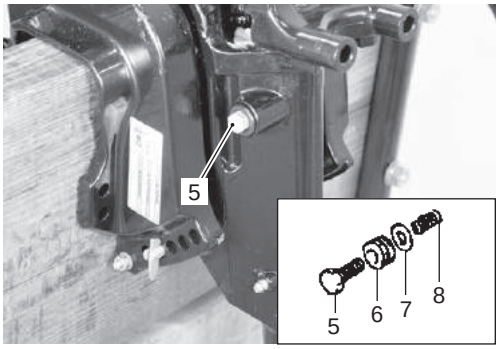

IDK111210085-01

5) Lift steering bracket (9) upward to remove from swivel bracket.
   Remove the washer (10), upper bush (11) from swivel bracket.

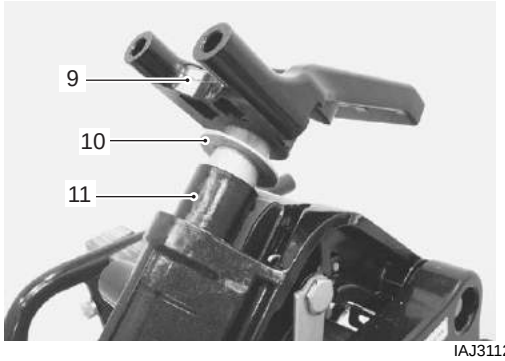

IAJ311210106-01

6) Remove the swivel bracket seal (12) and lower bush (13).

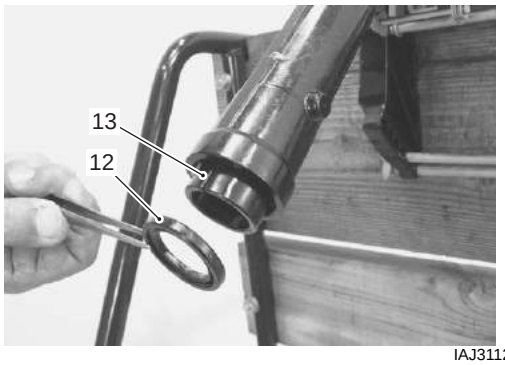

IAJ311210107-01

7) Remove the steering adjuster plate (14).

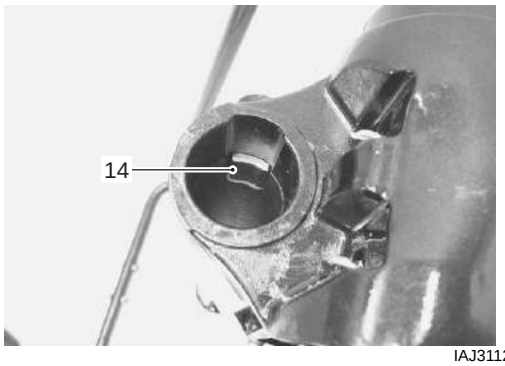

IAJ311210108-01

8) Remove the nut (15) from clamp bracket shaft.

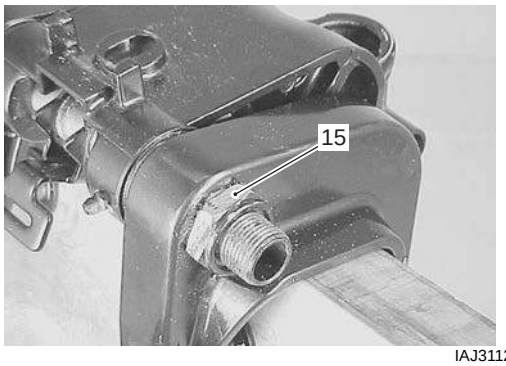

IAJ311210110-01

9) Remove the tilt lock pin (16).
Remove the nut (17), bolt (18) and spacer (19).

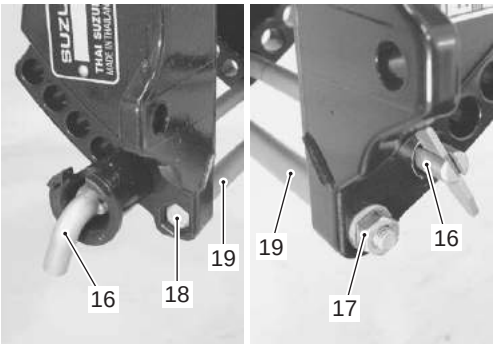

IAJ311210111-01

10) Remove the PORT clamp bracket (20).

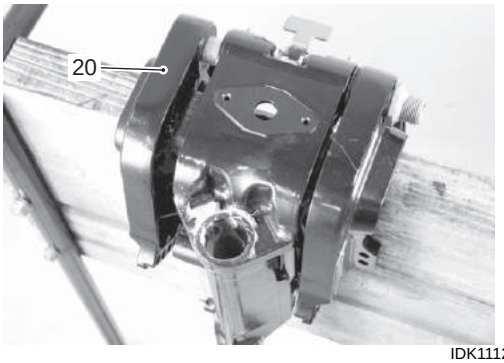

IDK111210009-02

11) Pull STBD clamp bracket (21) outward to remove clamp bracket and bracket shaft (22) from swivel bracket (23). Remove bushings (24) from each side of swivel bracket.

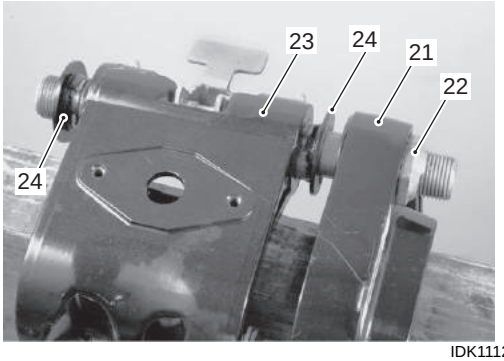

IDK111210086-01

12) Remove the spring (25).
Remove two bolts (26) and shallow drive arm (27).

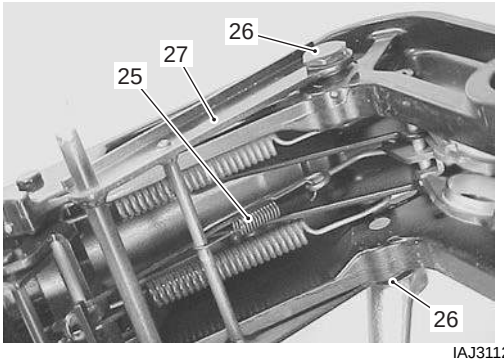

IAJ311210007-02

13) Remove two springs (28) from reverse lock arm (29) and pin (30).

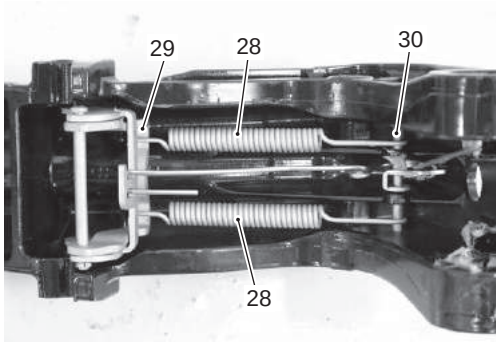

IDK111210087-01

14) Remove the release arm pin (30) and release link (31).

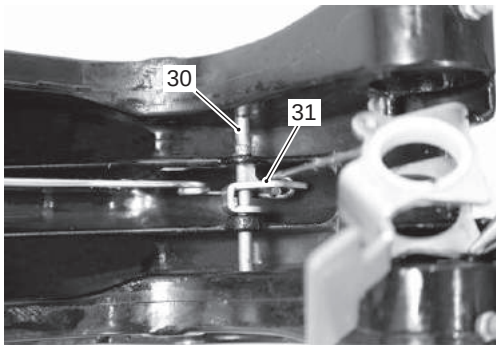

IDK111210088-01

15) Remove the cotter pin (32), washer (33), pin (34) and reverse lock arm link (35).
Remove the cotter pin (36), pin (37) and reverse lock arm (38).

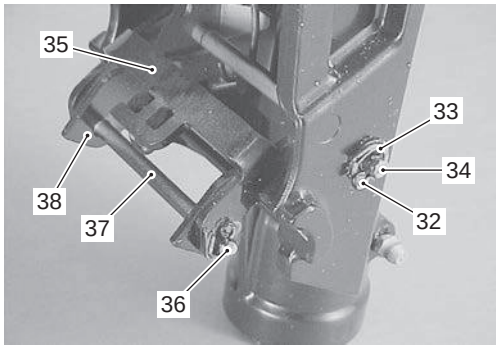

IDK111210089-01

Clamp / Swivel / Steering Brackets Assembly

CENDK1112106015

Assembly is reverse order of disassembly with special attention to the following steps.

Shallow Drive Arm

- Install shallow drive arm (1).
- Tighten the shallow drive arm bolts (2), pre-coated with thread lock, to specified torque.

Tightening torque
Shallow drive arm bolt (a): 25 N·m (2.5 kgf-m, 18.0 lbf-ft)

: Thread lock cement 99000–32050 (SUZUKI Thread Lock 1342 (50 g))

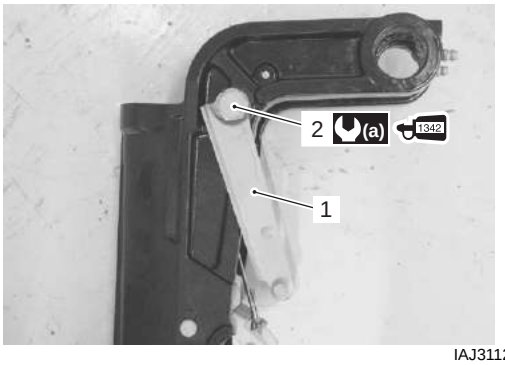

IAJ311210116-01

- Install the arm spring (3) as shown.

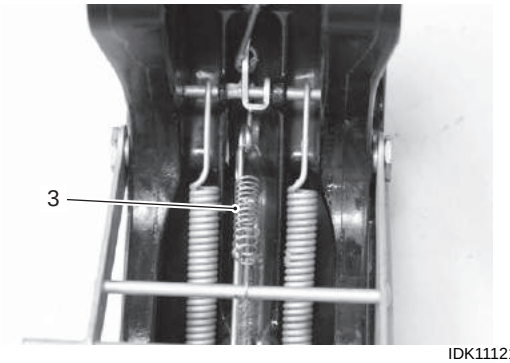

IDK111210090-01

Clamp Bracket and Swivel Bracket

NOTE

Before installing clamp bracket to swivel bracket, apply grease to clamp bracket shaft and bushings.

: Grease 99000–25350 (SUZUKI Water Resistant Grease EP2 (250 g))

1) Connect the release link (1) to release lever (2).

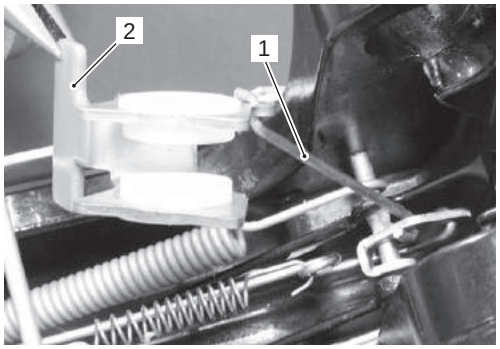

IDK111210091-01

2) Insert PORT and STBD bushings (3) into the swivel bracket (4).

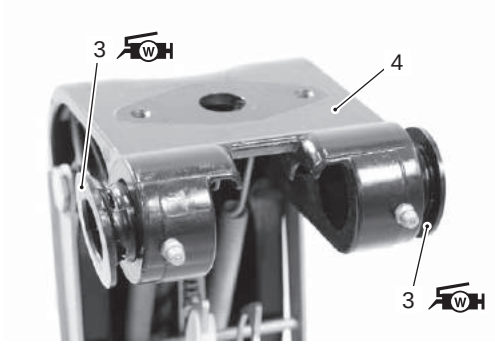

IDK111210092-01

3) Assemble the clamp bracket shaft (5), STBD clamp bracket (7), release lever (2), bushings (8) and swivel bracket (4).

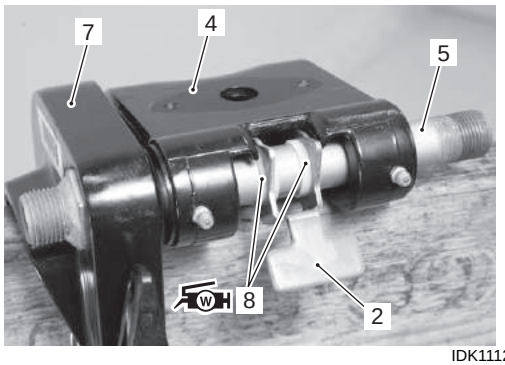

IDK111210093-01

4) Install PORT clamp bracket (9).

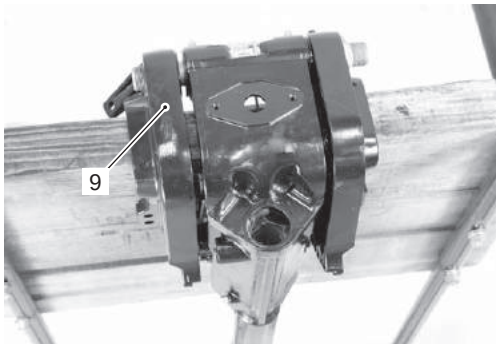

IDK111210094-01

5) Install the clamp bracket shaft nut (10), then tighten the clamp bracket shaft nut to specified torque.

Tightening torque
Clamp bracket shaft nut (a): 43 N·m (4.3 kgf-m, 31.0 lbf-ft)

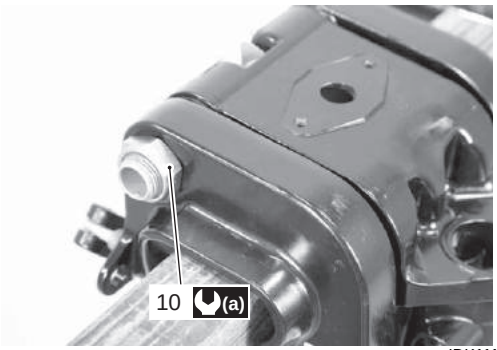

IDK111210010-03

Steering Bracket

1) Install the steering adjuster plate (1) to swivel bracket.

: Grease 99000–25350 (SUZUKI Water Resistant Grease EP2 (250 g))

NOTE

Apply grease to bushings, seal and pilot shaft portion of steering bracket.

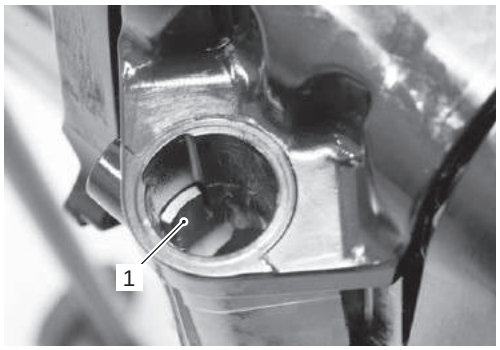

IDK111210095-01

2) Install the upper bushing (2) and washer (3) to swivel bracket.

NOTE

- **The bushing (2), (4) outside face is tapered. Install the bushing into the swivel bracket with the smaller diameter side being inserted first.**
- **Be certain that steering adjuster (1) is placed between upper bushing (2) and swivel bracket casing.**

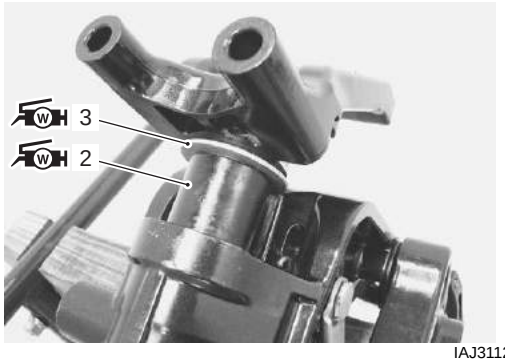

IAJ311210127-01

3) Install the lower bushing (4) and swivel bracket seal (5) to swivel bracket.

NOTE

Install bracket seal (5) with oil seal lip (spring side) facing downward

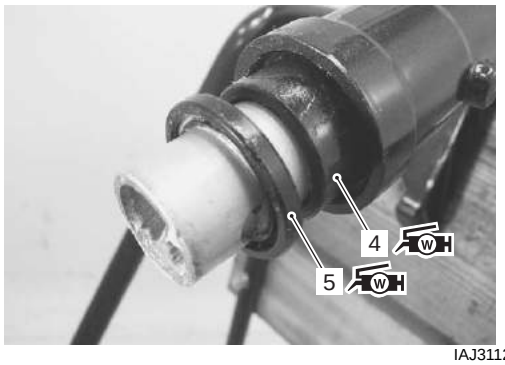

IAJ311210128-01

Handle Bracket

1) Install the steering friction adjuster (1).
   Refer to “Steering Friction Adjuster Disassembly and Assembly” (Page 2A-5).

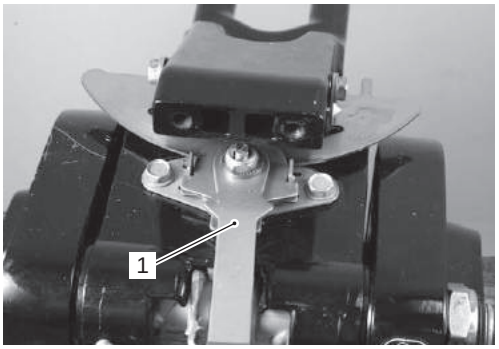

IDK111210096-01

2) Install the handle bracket (2) to steering bracket, then securely tighten it with bolts (3).

   Tightening torque
   Handle bracket bolt (a): 23 N·m (2.3 kgf-m, 16.5 lbf-ft)

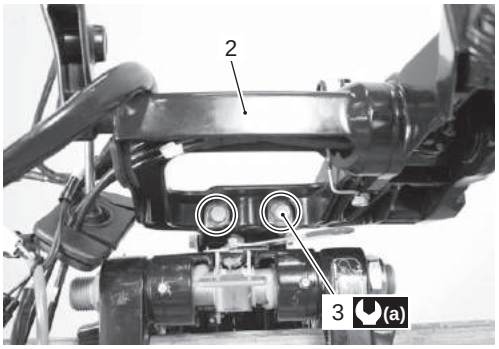

IDK111210097-01

Lubrication

After completing reassembly of the mid unit, apply grease through each grease nipple.

: Grease 99000–25350 (SUZUKI Water Resistant Grease EP2 (250 g))

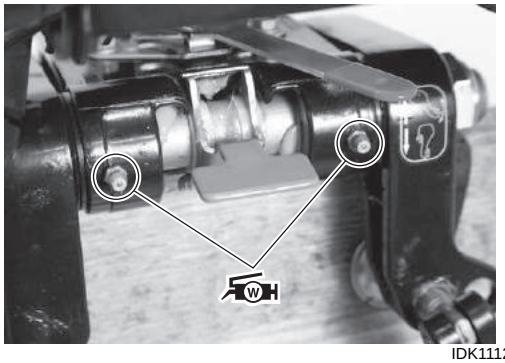

IDK111210098-01

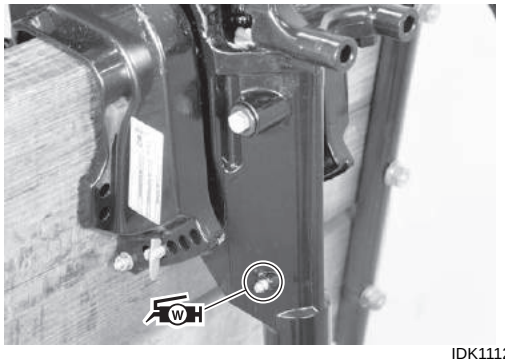

IDK111210099-01

Clamp / Swivel / Steering Brackets Related Components Inspection

CENDK1112106016

Refer to “Clamp / Swivel / Steering Brackets Disassembly” (Page 2A-22) and “Clamp / Swivel / Steering Brackets Assembly” (Page 2A-24).

NOTE

If any component is found to be excessively worn, cracked, defective or damaged in any way, it must be replaced.

Bushings

Check all bushings. If excessive wear or other damage is found, replace bushing. If bushing fit is loose when installing, replace bushing.

IDK111210100-01

Oil Seal

Check swivel bracket seal. If excessive wear or other damage is found, replace seal.

IAJ311210134-01

Clamp Bracket Shaft

Check clamp bracket shaft.
If clamp bracket shaft is bent or twisted, replace shaft.

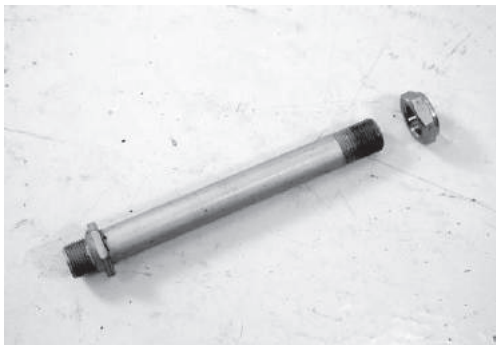

IDK111210101-01

Bracket

Check clamp brackets, steering bracket and swivel bracket.
If cracks or other damage is found, replace bracket (s).

IDK111210102-01

Section 3

Lower Unit

CONTENTS

Precautions

Precautions

General Precautions

CENDK1113000001

Refer to “General Precautions” in Section 00 (Page 00-1).

Precaution for Lower Unit

CENDK1113000002

⚠ WARNING

Failure to take proper precautions when installing or removing the propeller can result in severe personal injury.

When installing or removing the propeller:

- **Shift into Neutral and remove the emergency stop switch lock plate so that the motor cannot be started accidentally.**
- **Wear gloves to protect hands, and lock the propeller by placing a block of wood between the propeller blade tips and the anti-cavitation plate before attempting to remove or install propeller nut.**

⚠ WARNING

Failure to take proper precautions when removing or installing the lower unit can result in severe personal injury.

When installing or removing the lower unit:

- **Always disconnect the battery cable, before removing lower unit.**
- **Remove the emergency stop switch lock plate from the emergency stop switch.**

NOTE

- **When draining lower unit gear oil, check the following points.**
  - **Water ingress (white, milky appearance)**
  - **Overheating or burning (black appearance, charred smell)**
  - **Metal filings or deposits**
- **If reassembling with original components and gears, do not omit or add any shims or thrust washers.**
- **To simplify reassembly and to prevent confusion, note the positions and quantities of all shims and thrust washers. Retain these items next to the gears or bearings to which they belong.**

Right Hand Rotation Unit

Diagnostic Information and Procedures

Diagnose Lower Unit Malfunction

CENDK1113104001

Trouble Check Chart

Condition	Possible cause	Correction / Reference item
Engine stalls when engaging gear	Idling speed set too low.	*Adjustment.*
	Propeller shaft bearings damaged, lacking lubrication or seized.	*Replace.*
Engaging gear(s) has no effect on propulsion	Clutch out of adjustment.	*Adjustment.*
	Driveshaft broken or splines damaged.	*Replace.*
	Chipped or worn dog clutches.	*Replace.*
	Propeller not secured correctly (fallen off).	*Inspection or retighten.*
Loss of power. (Assuming engine is OK)	Propeller bush slipping.	*Replace.*
	Bent or worn propeller.	*Repair or replace.*
Engine shakes the boat	Failed propeller bush.	*Replace.*
	Bent driveshaft or propeller shaft.	*Replace.*
	Damaged propeller.	*Replace.*
Clutch will not engage or disengage	Seized shift rod.	*Inspection.*
	Clutch shaft and clutch rod have become detached.	*Inspection.*
	Seized / broken remote control cable.	*Replace.*
	Problem at control box end.	*Inspection or replace.*

Service Instructions

Lower Unit Components

CENDK1113106001

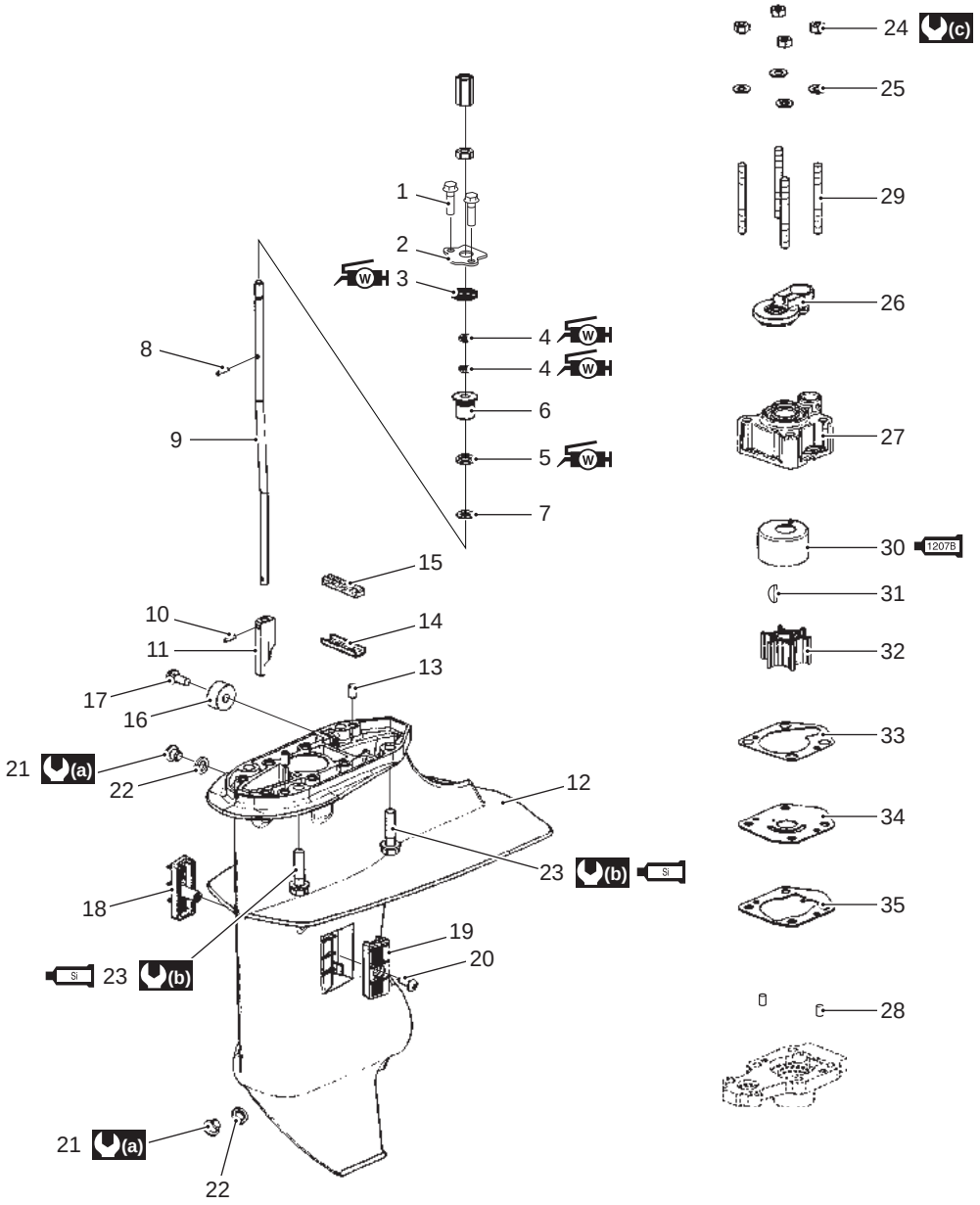

IAJ311310002-05

1. Bolt	12. Gearcase	23. Bolt	34. Under panel
2. Stopper	13. Dowel pin	24. Nut	35. Gasket
3. Dust seal	14. EX. Seal core	25. Washer	(a) : 5 N·m (0.5 kgf-m, 3.6 lbf-ft)
4. O-ring	15. EX.seal rubber	26. Grommet	(b) : 17 N·m (1.7 kgf-m, 12.3 lbf-ft)
5. O-ring	16. Anode	27. Water pump case	(c) : 6 N·m (0.6 kgf-m, 4.3 lbf-ft)
6. Shift rod guide	17. Bolt	28. Dowel pin	W : Apply SUZUKI Water Resistant Grease.
7. Washer	18. Water filter STBD	29. Stud bolt	Si : Apply SUZUKI Silicone seal.
8. Pin	19. Water filter PORT	30. Pump case inner sleeve	1207B : Apply SUZUKI Bond 1207B.
9. Shift rod	20. Screw	31. Key	
10. Pin	21. Plug	32. Water pump impeller	
11. Shift cam	22. Gasket	33. Gasket	

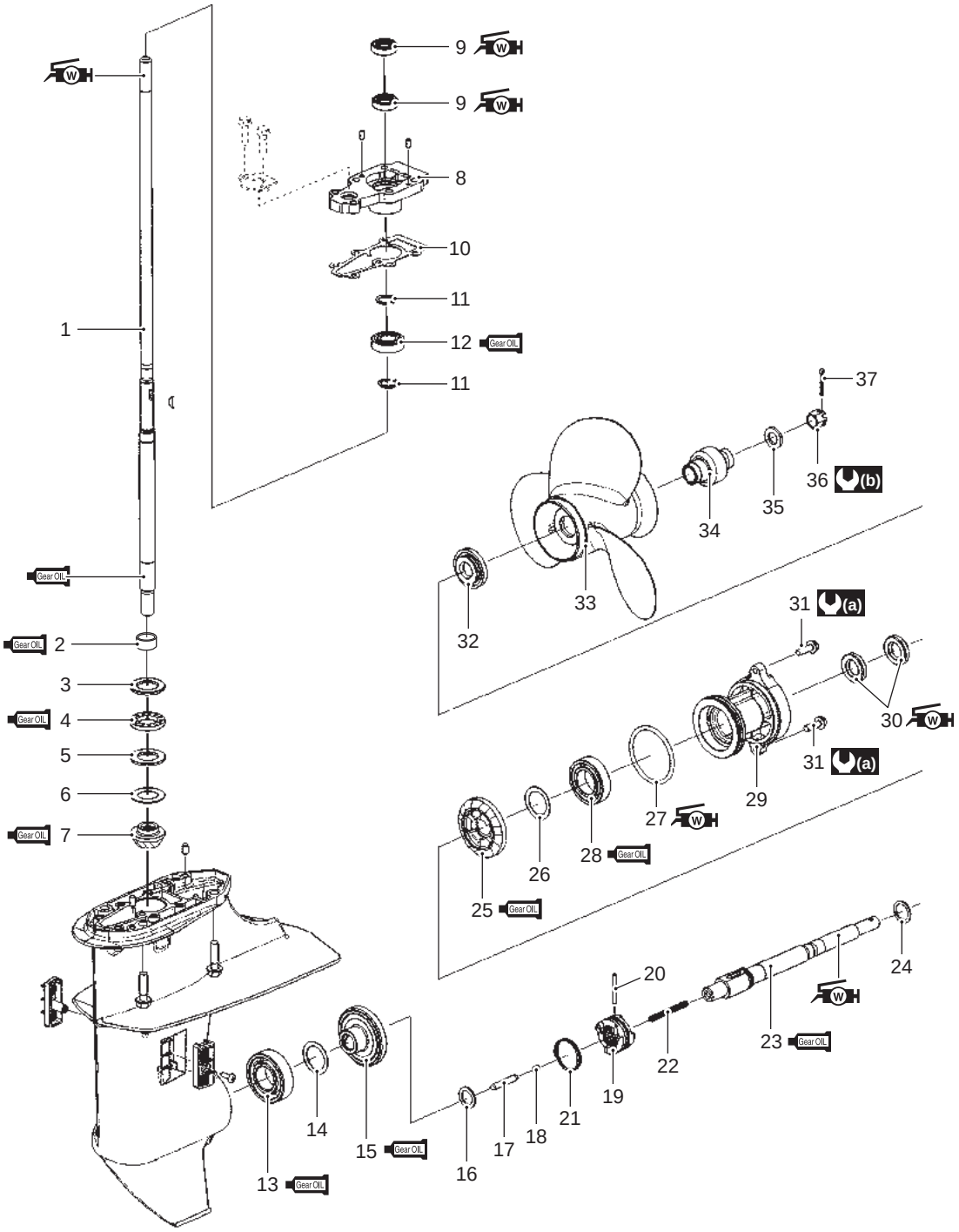

IDK111310001-02

1. Driveshaft	12. Bearing	23. Propeller shaft	34. Propeller bush
2. Pinion bearing	13. Forward gear bearing	24. Thrust washer	35. Washer
3. Thrust washer	14. Shim	25. Reverse gear	36. Nut
4. Bearing	15. Forward gear	26. Shim	37. Pin
5. Thrust washer	16. Thrust washer	27. O-ring	(a) : 8 N·m (0.8 kgf-m, 5.8 lbf-ft)
6. Shim	17. Push rod	28. Bearing	(b) : 18 N·m (1.8 kgf-m, 13.0 lbf-ft)
7. Pinion gear	18. Push pin	29. Propeller shaft bearing housing	W : Apply SUZUKI Water Resistant Grease.
8. Driveshaft oil seal housing	19. Clutch dog shifter	30. Oil seal	Gear OIL : Apply SUZUKI Outboard Motor Gear Oil.
9. Oil seal	20. Dog pin	31. Bolt	
10. Gasket	21. Dog spring	32. Stopper	
11. Circlip	22. Return spring	33. Propeller	

Propeller Removal and Installation

CENDK1113106002

⚠ WARNING

Failure to take proper precautions when installing or removing the propeller can result in severe personal injury.

When installing or removing the propeller:

- **Shift into “Neutral” and remove the emergency stop switch lock plate so that the motor cannot be started accidentally.**
- **Wear gloves to protect hands, and lock the propeller by placing a block of wood between the propeller blade tips and the anti-cavitation plate before attempting to remove or install propeller nut.**

Removal

1) Shift to “Neutral” position.
2) Remove cotter pin (1) from propeller nut and remove propeller nut (2).
3) Remove washer (3), propeller (4) and stopper (5) from the propeller shaft.

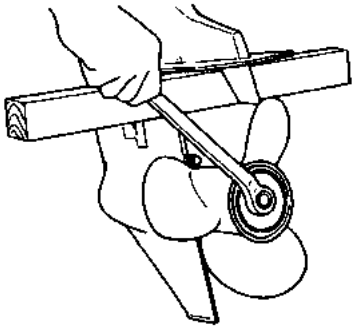

I9J011310001-01

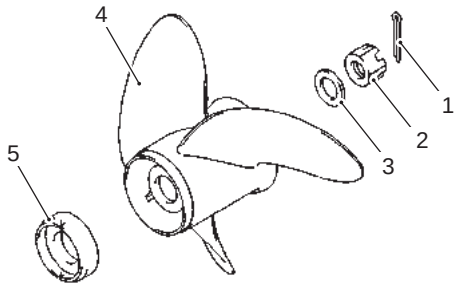

IDK111310002-01

Installation

1) Coat the propeller shaft splines liberally with Suzuki water resistant grease.

   : Grease 99000–25350 (SUZUKI Water Resistant Grease EP2 (250 g))

2) Install propeller stopper (1) onto propeller shaft, then slide on the propeller (2).
3) Fit washer (3) and nut (4), then tighten nut to specified torque.
4) Push cotter pin (5) through nut and shaft, then bend to secure.

   Tightening torque
   Propeller nut (a): 18 N·m (1.8 kgf-m, 13.0 lbf-ft)

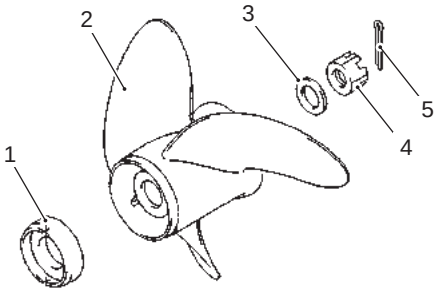

IDK111310003-01

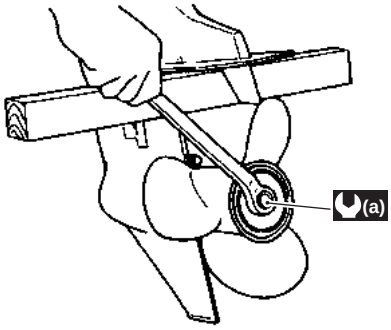

I9J011310003-04

Propeller / Nut / Cotter Pin Inspection

CENDK1113106003

Refer to “Propeller / Propeller Nut and Cotter Pin Inspection” in Section 0B (Page 0B-18).

Lower Unit Removal and Installation

CENDK1113106004

Removal

⚠ WARNING

Failure to take proper precautions when removing or installing the lower unit can result in severe personal injury.

Always disconnect the battery cable, before removing lower unit.

1) Loosen the clutch rod lock nut (1).
2) To separate the clutch rod from the shift rod, unscrew the connector (2).

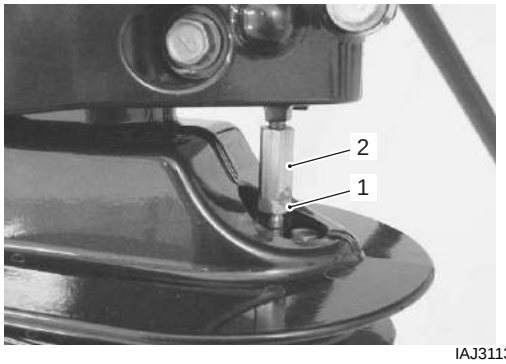

IAJ311310011-01

3) Remove four bolts (3) and separate gearcase (4) from driveshaft housing.

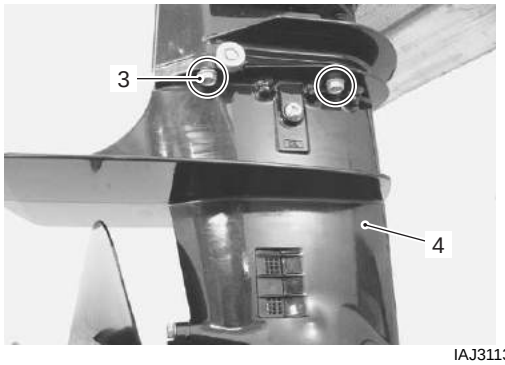

IAJ311310012-01

Installation

1) Insert two dowel pins (1).
2) Apply water resistant grease to driveshaft splines.

: Grease 99000–25350 (SUZUKI Water Resistant Grease EP2 (250 g))

3) Apply a light coating of Suzuki silicone seal to mating surfaces of gearcase and driveshaft housing.

Si : Sealant 93691–80030 (SUZUKI Silicone Seal (100 g))

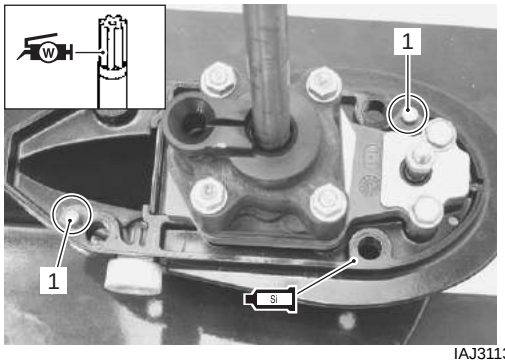

IAJ311310013-01

4) Slide the lower unit (2) into place, making sure that the top of the driveshaft engages properly with the crankshaft and that water tube locates in the water pump case outlet.
Apply SUZUKI SILICONE SEAL to the retaining bolts (3) and tighten them to specified torque.

Si : Sealant 93691–80030 (SUZUKI Silicone Seal (100 g))

Tightening torque
Gearcase bolt (a): 17 N·m (1.7 kgf-m, 12.3 lbf-ft)

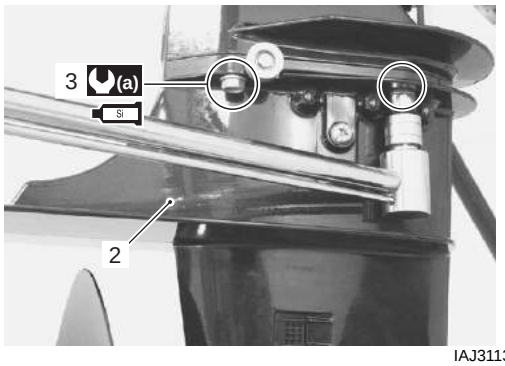

IAJ311310014-02

5) Connect the clutch rod and the shift rod using the clutch rod connector in the following procedure:

NOTE

The clutch rod connector is not a turnbuckle but just a long nut with right-hand thread.

a) Screw the clutch rod connector (4) onto the clutch rod (5) all the way to the end of its thread.
b) Screw the lower nut (6) onto the shift rod (7) all the way to the end of its thread.
c) Locate the shift cam at Neutral position by moving shift rod (7) up or down and then hold it at the position.
d) While holding the clutch lever (8), shift lever (9) and shift cam at neutral position, screw the clutch rod connector (4) onto the shift rod (7) until the connector contacts the lower nut (6).

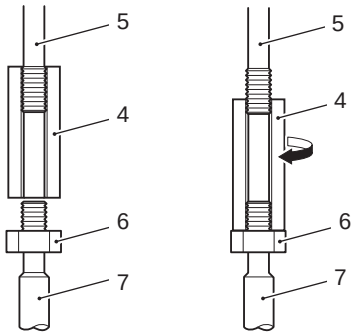

IAJ311310008-01

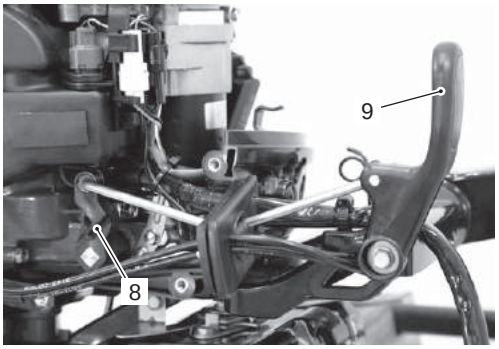

IDK111310007-01

e) With the clutch rod connector (4) securely held, tighten the lower nut (6) firmly against the connector.
f) Shift the shift lever from Neutral to Forward and Reverse to check that the gear starts engagement of both gears are at an equal angle from Neutral.

Water Pump Removal and Installation

CENDK1113106005

Removal

1) Remove the lower unit. Refer to “Lower Unit Removal and Installation” (Page 3A-5).
2) Loosen four nuts (1), then remove water pump case (2).

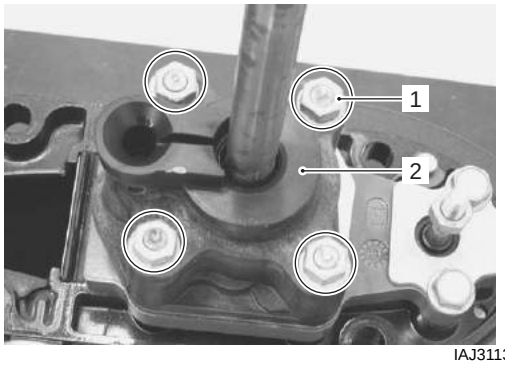

IAJ311310017-01

3) Remove impeller (3), impeller key (4), pump under plate (5) and dowel pins (6).
Keep impeller key (4) for reuse and discard the plate gasket.

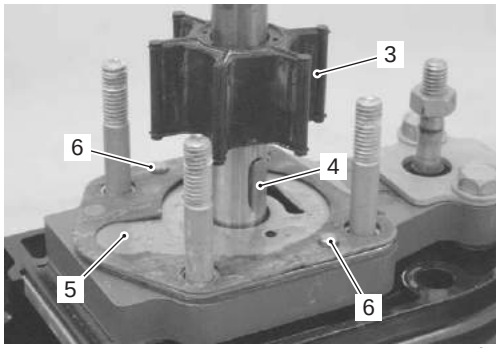

IAJ311310018-01

NOTE

To facilitate the removal of inner sleeve from pump case, warm up the entire case using a heater like hair dryer.

4) Remove inner sleeve (7) from pump case.

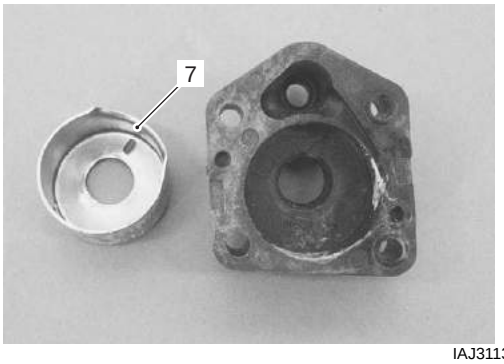

IAJ311310019-01

Installation

1) Place the dowel pins (1), under panel gasket (2) and under panel (3) into position.
2) Install the pump case gasket (4).
3) Insert the key (5) in the driveshaft and slide the impeller (6) onto driveshaft, ensuring that key and keyway is aligned.

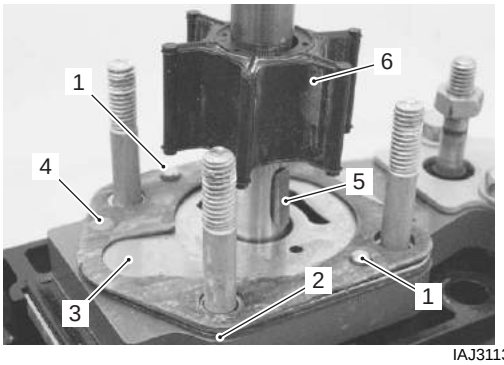

IAJ311310020-01

NOTE

- **Before installing pump inner sleeve, apply SUZUKI Bond 1207B lightly between inner sleeve and pump case mating surfaces.**
- **Do not apply bond to inner sleeve top surfaces.**

4) Install inner sleeve (7) into the pump case, ensuring that projection of inner sleeve and groove of pump case are aligned.

1207B : Sealant 99000–31140 (SUZUKI Bond 1207B (100 g))

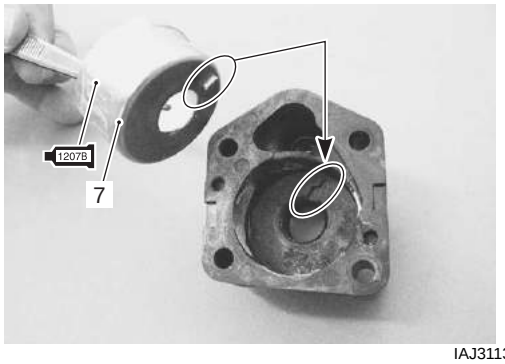

IAJ311310021-02

NOTE

Before installing water pump case assembly, apply water resistant grease lightly on pump case inner sleeve and under panel for initial lubrication.

W : Grease 99000–25350 (SUZUKI Water Resistant Grease EP2 (250 g))

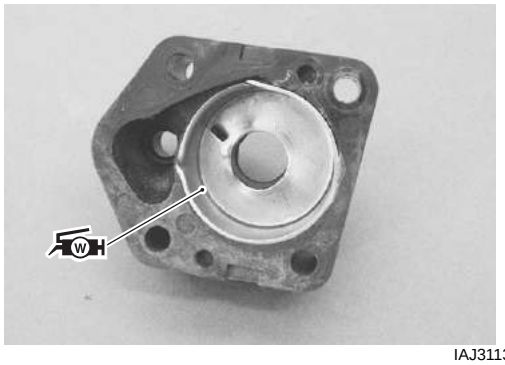

IAJ311310022-01

5) Install the pump case assembly (8) while rotating driveshaft clockwise to flex the impeller vanes in the correct direction.
Securely tighten the four pump case nuts (9) to the specified torque.

Tightening torque
Water pump case nut (a): 6 N·m (0.6 kgf-m, 4.3 lbf-ft)

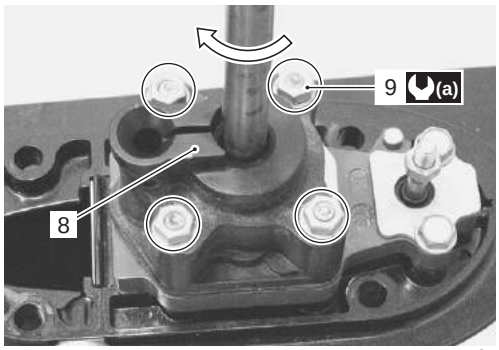

IAJ311310023-01

6) Install the Lower Unit. Refer to “Lower Unit Removal and Installation” (Page 3A-5).

Water Pump and Related Items Inspection

CENDK1113106006

Inspect the following parts.

- Inspect impeller. Replace if vanes are cut, torn, worn or other abnormal conditions.
- Inspect pump case. Replace if cracked, distorted or other abnormal conditions are noted.
- Inspect pump inner sleeve. Replace if worn, cracked, distorted, corroded or other abnormal conditions are noted.
- Inspect under panel. Replace if cracked, distorted, corroded or other abnormal conditions are noted.

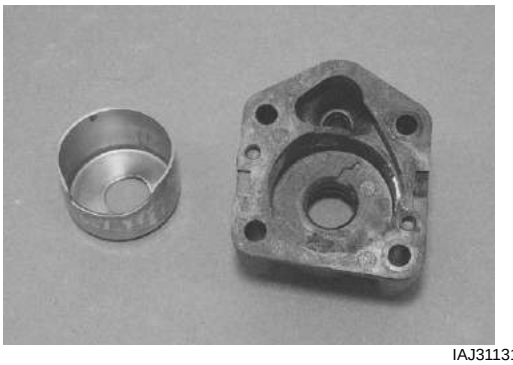

IAJ311310024-01

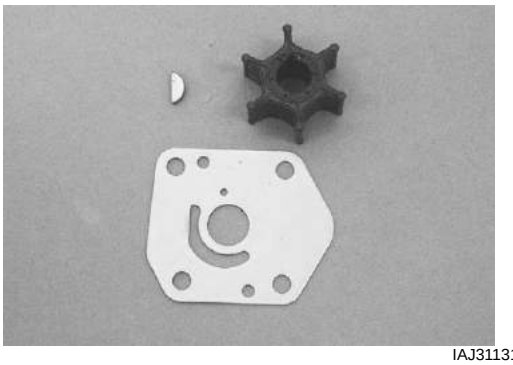

IAJ311310025-01

Lower Unit Disassembly

CENDK1113106007

1) Remove the lower unit. Refer to “Lower Unit Removal and Installation” (Page 3A-5).
2) Remove the propeller. Refer to “Propeller Removal and Installation” (Page 3A-4).
3) Remove the water pump and related parts. Refer to “Lower Unit Removal and Installation” (Page 3A-5) and “Water Pump Removal and Installation” (Page 3A-6).
4) Place a drain pan under oil drain plug. Remove oil drain plug (1) first then oil level plug (2) and allow gear oil to drain.
   Inspect oil for water, contaminates or metal.

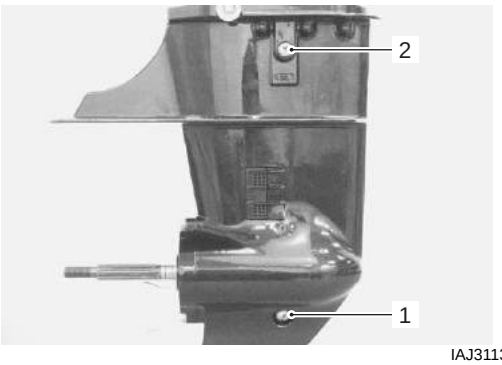

IAJ311310026-01

5) Remove the two bolts (3) securing the propeller shaft bearing housing to the gearcase.

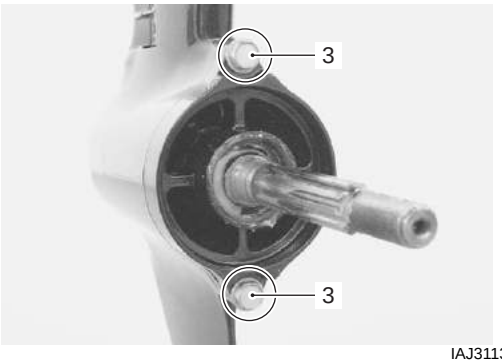

IAJ311310027-01

6) Using special tools, pull out the propeller shaft bearing housing.
   Remove the propeller shaft and bearing housing assembly (4).

Special tool

TOOL (A): 09930–30104 (Sliding hammer)
TOOL (B): 09950–59320 (Propeller shaft remover)

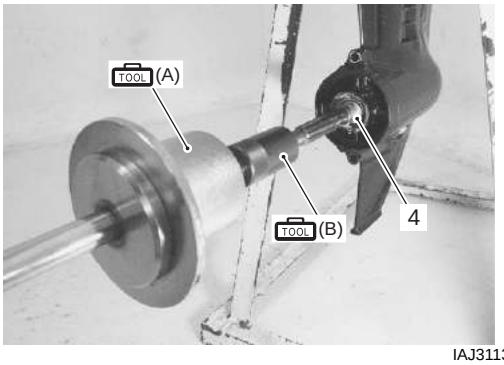

IAJ311310028-01

7) Remove the nut (5), two bolts and shift rod guide stopper (6).

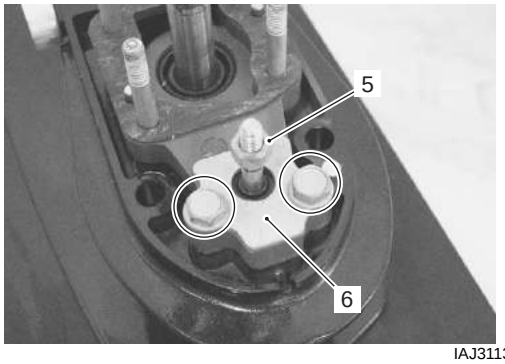

IAJ311310029-01

8) Lift out driveshaft (7), driveshaft oil seal housing (8) and shift rod assembly (9).

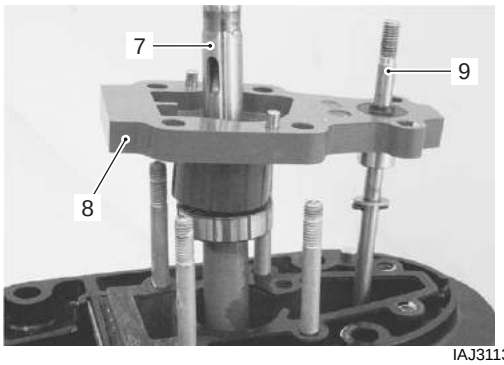

IAJ311310030-01

9) Remove driveshaft (7) from driveshaft oil seal housing (8).

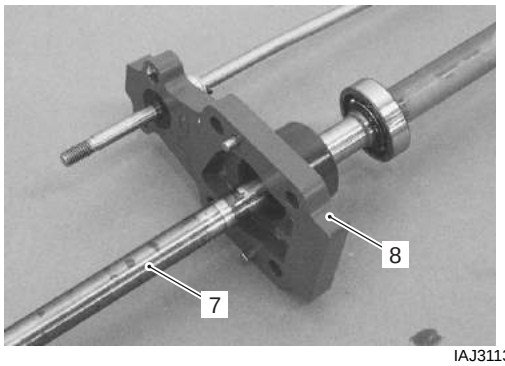

IAJ311310031-01

10) Slide the shift rod (9) out of the shift rod guide (10).

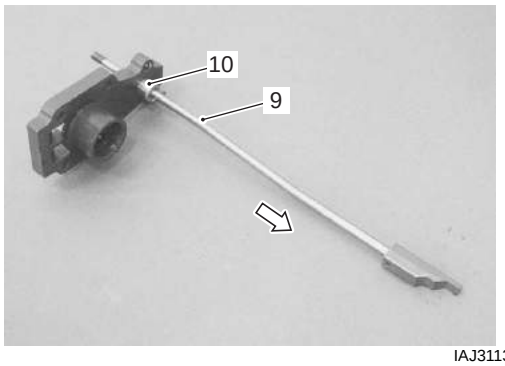

IAJ311310032-01

11) Push the dust seal (11) and shift rod guide (10) out from driveshaft oil seal housing.

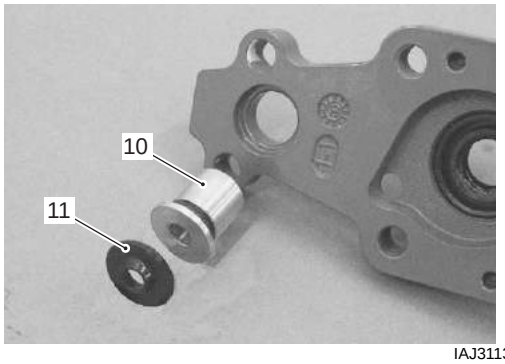

IAJ311310033-01

12) Separate the shift cam (12) from the shift rod (13) by driving out the spring pin (14).

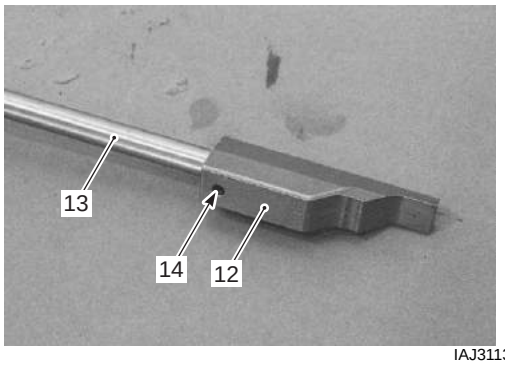

IAJ311310034-01

13) Remove the pinion gear (15), thrust washer (16), thrust bearing (17), thrust washer (18) and pinion gear back up shim (19).

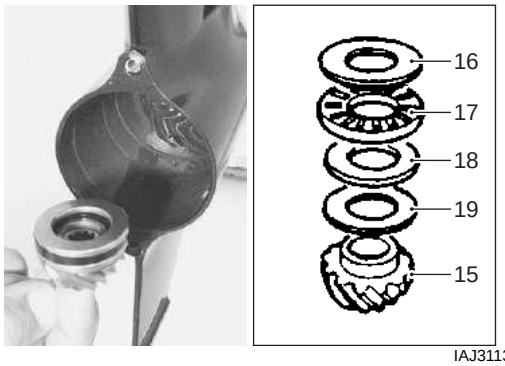

IAJ311310035-01

14) Remove the forward gear (20), thrust washer (21) and forward gear back-up shim (22).

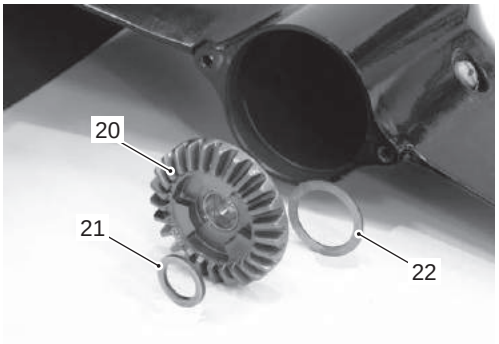

IDK111310008-01

15) Remove the exhaust seal core (23) and seal rubber (24) (if necessary.)

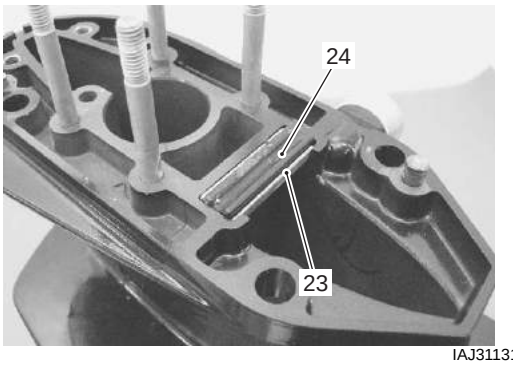

IAJ311310037-01

16) To disassemble propeller shaft components, refer to following:

a) Slide propeller shaft away from reverse gear (25) and bearing housing assembly (26).
Account for the reverse gear back-up shim (27) and reverse gear thrust washer (28).

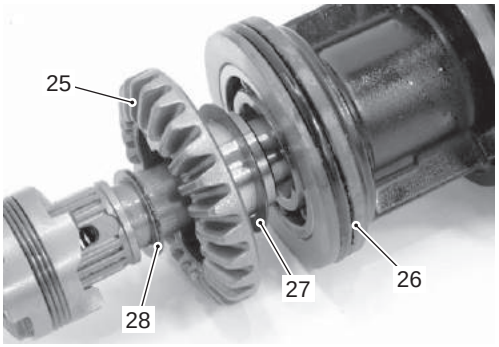

IDK111310009-01

b) Pull the push rod (29) and push pin (30) out of the propeller shaft.

c) Remove the spring (31) from clutch dog shifter (32).

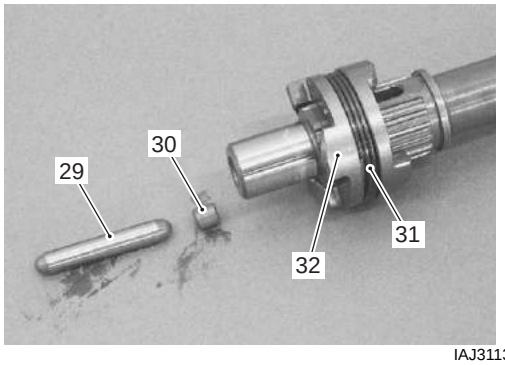

IAJ311310039-01

d) Use special tool to push the dog pin (33) out of the clutch dog shifter.

Special tool
TOOL (A): 09922–89810 (Shift lock pin remover)

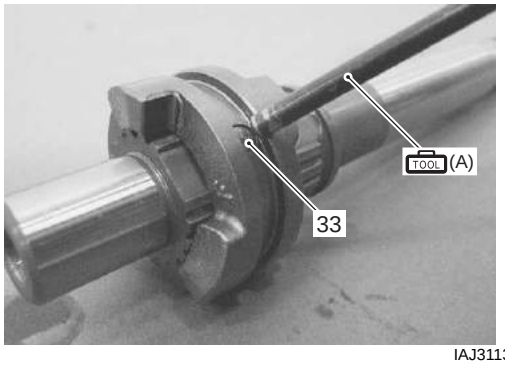

IAJ311310040-01

e) Remove clutch dog shifter (32) and clutch return spring (34) from propeller shaft.

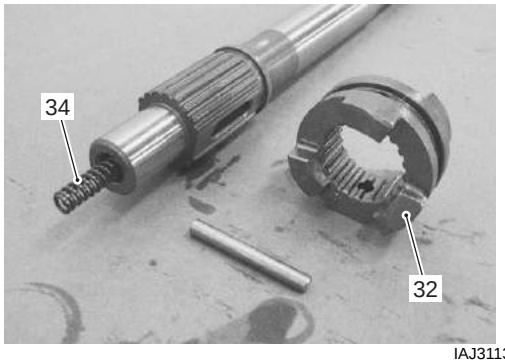

IAJ311310041-01

Pinion Bearing Removal and Installation

CENDK1113106008

NOTICE

Removing the bearing can cause damage to needle rollers and outer race. If the removed bearing is re-used, problem will occur in the lower unit.

Do not reuse pinion bearings once removed. Always use new ones.

Removal and Installation Tools

To remove the pinion bearing from the gearcase, use the following special tools.

Special tool

TOOL (A): 09951–59910 (Shaft (removal and installation))
TOOL (B): 09951–49910 (Removal shaft)
TOOL (C): 09951–69910 (Bearing)
TOOL (D): 01500–08403 (Bolt)
TOOL (E): 09951–38710 (Plate)
TOOL (F): 09951–18910 (Pinion bearing remover and installer attachment)
TOOL (G): 09951–29910 (Nut)
TOOL (H): 09930–30104 (Sliding hammer)

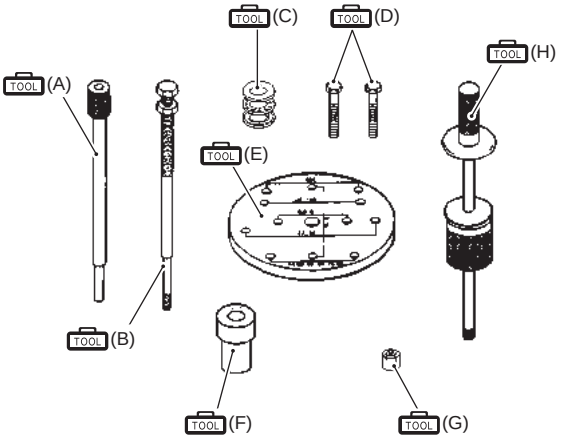

IDK111310004-01

Removal

1) Disassemble the lower unit.
   Refer to “Lower Unit Disassembly” (Page 3A-8).

2) Remove the water pump stud bolts (1).

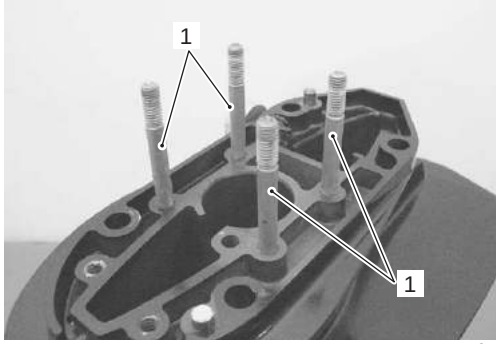

IAJ311310042-01

3) Set the plate (E) on the gearcase with two bolts (D).

NOTE

For set the plate, using the two gearcase mounting bolt holes of forward side.

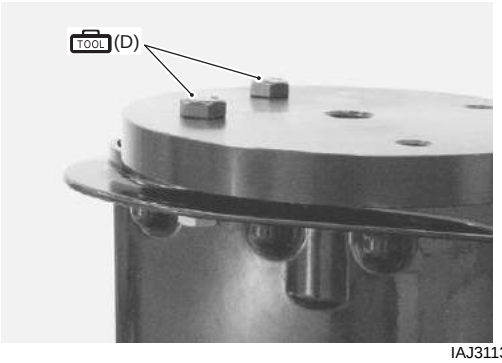

IAJ311310044-01

4) Set the removal shaft (B), bearing (C), attachment (F) and nut (G) as shown.
5) To push the pinion bearing (2) out of gearcase, turn the lower nut (3) clockwise while holding the removal shaft head (4) tightly.

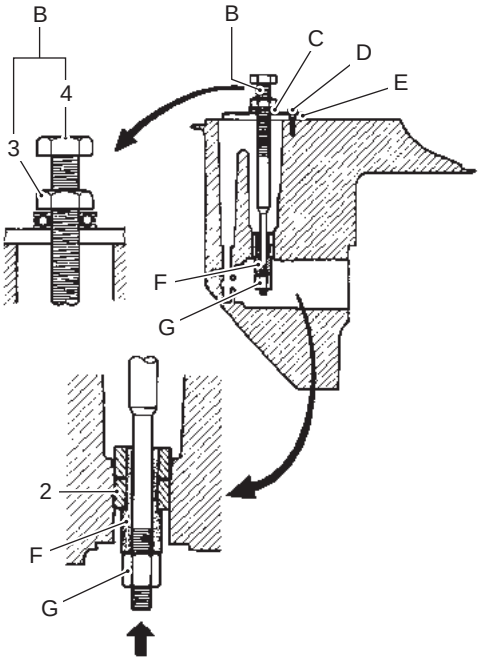

IDK111310005-02

Installation

NOTE

- **Before installing bearing, ensure that inside of gearcase is clean and free of debris.**
- **Ensure that the bearing stamped mark faces upward.**

1) Set the installer shaft (A), plate (E), attachment (F) and pinion bearing (1) as shown.
2) Place the installer shaft (A) (with pinion bearing on end of installer shaft) into the gearcase.
3) Secure the plate (E) by tightening the bolts (D) and nuts.
4) Thread the sliding hammer (H) into the top of the installer shaft (A).
5) Drive the pinion bearing (1) down into position by gently striking the installer shaft (A) until the coupler touches the plate (E).
6) Assemble the lower unit. Refer to “Lower Unit Assembly” (Page 3A-16).

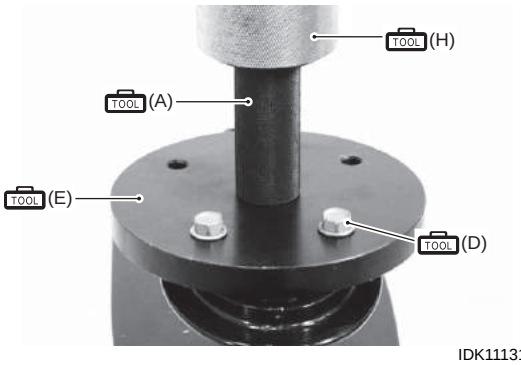

IDK111310010-01

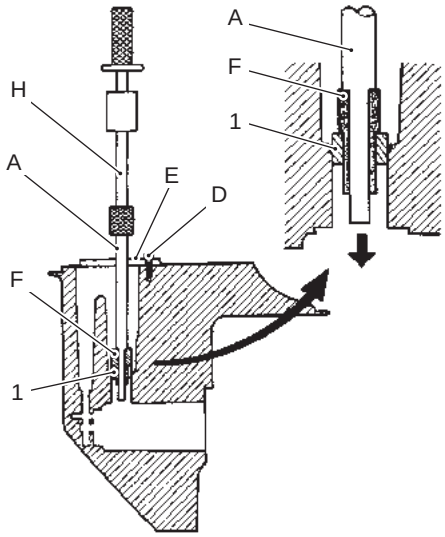

IDK111310006-03

Lower Unit Related Items Inspection

CENDK1113106009

⚠ WARNING

Failure to following proper precautions during use of the compressed air may cause severe personal injury.

Wear safety glasses when using compressed air.

NOTE

- **If any component is worn excessively, cracked, defective or damaged in any way, it must be replaced.**
- **Thoroughly wash all metal components with cleaning solvent and dry with compressed air.**

Gearcase

- Inspect the gearcase. Replace if cracked, damaged or other abnormal conditions are noted.
- Visually check the pinion bearing. Replace bearing if pitted, rough or other abnormal conditions are noted.

NOTE

If removal and replacement are required, refer to “Pinion Bearing Removal and Installation” (Page 3A-11).

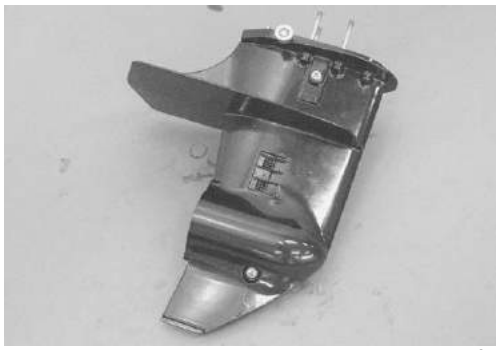

IAJ311310048-01

Gears / Bearing

- Inspect forward, reverse and pinion gear teeth and engaging dogs.
  Replace gears if damaged, worn or other abnormal conditions are noted.
- Inspect the thrust bearing and forward gear bearing. Replace bearing if pitted, noisy, rough or other abnormal conditions are noted.

IDK111310011-01

IAJ311310050-01

Propeller Shaft Components

- Inspect the push rod and push rod pin. Replace if worn, damaged or other abnormal conditions are noted.
- Inspect clutch dog shifter. Replace if chipped, worn, damaged or other abnormal conditions are noted.
- Inspect dog pin. Replace if bent, worn or other abnormal conditions are noted.
- Inspect propeller shaft / splines. Replace if worn, twisted, damaged or other abnormal conditions are noted.

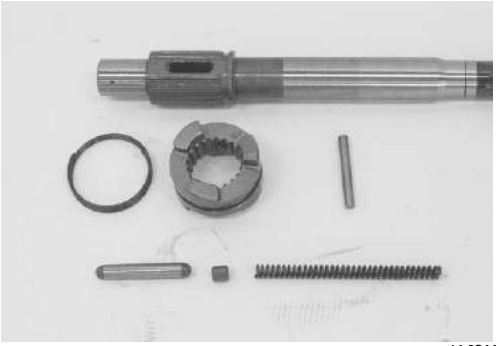

IAJ311310051-01

IAJ311310052-01

- Check clutch return spring by measuring its free length. If free length is not within specifications, replace clutch return spring.

  <u>Clutch return spring free length “a”</u>
  Standard: 70 mm (2.8 in.)
  Service limit: 67 mm (2.6 in.)

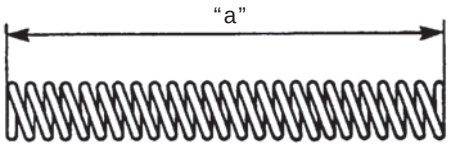

I9J011310062-01

Propeller Shaft Bearing Housing

- Inspect housing. Replace if cracked, damaged or other abnormal conditions are noted.
- Inspect reverse gear bearing and propeller shaft bushing. Replace bushing if pitted, rough or other abnormal conditions are noted.
- Check condition of oil seal and O-ring. Replace oil seal and O-ring if nicked, cut, worn or other abnormal conditions are noted.

IAJ311310053-01

IAJ311310054-01

Shift Rod and Shift Cam Components

- Inspect the “stepped” surfaces of shift cam. Replace if worn, damaged or other abnormal conditions are noted.
- Inspect shift rod guide. Replace if cracked, damaged or other abnormal conditions are noted.
- Inspect O-ring. Replace if nicked, cut, torn, swollen or other abnormal conditions are noted.

IAJ311310055-01

IAJ311310056-01

Driveshaft Oil Seal Housing

- Inspect housing. Replace if cracked, damaged or other abnormal conditions are noted.
- Check condition of oil seals. Replace if nicked, cut, worn or other abnormal conditions are noted.

IAJ311310057-01

Driveshaft

- Inspect driveshaft / splines. Replace if worn, twisted, damaged or other abnormal conditions are noted.
- Inspect driveshaft bearing, replace if pitted, noisy, rough or other abnormal conditions are noted.

IAJ311310058-01

IAJ311310059-01

Propeller Shaft Oil Seal Replacement

CENDK1113106010

1) Remove the propeller shaft bearing housing. Refer to “Lower Unit Disassembly” (Page 3A-8).
2) Extract seals (1) with oil seal remover.

NOTICE

Removing the oil seal can cause damage to the seal lips, causing oil to leak.

Do not reuse the oil seal once removed. Always use new one.

Special tool
TOOL (A): 09913–50121 (Oil seal remover)

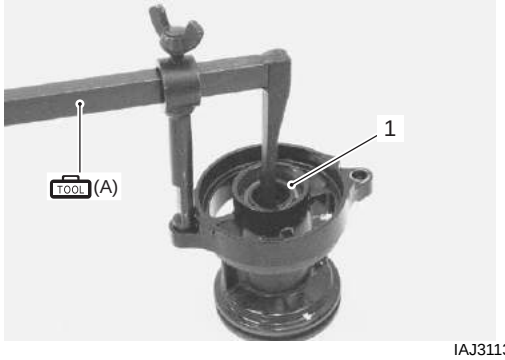

IAJ311310060-02

3) Apply water resistant grease to the inner circumference of the housing.

: Grease 99000–25350 (SUZUKI Water Resistant Grease EP2 (250 g))

4) Using an oil seal installer, drive the two oil seals (one at a time) into the propeller shaft bearing housing. The lipped portion of the seal must face towards the propeller. Apply water resistant grease to the seal lips.

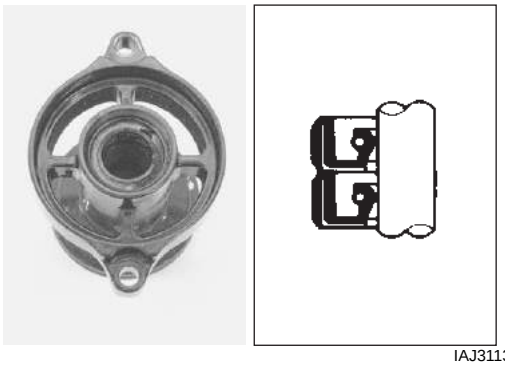

IAJ311310010-02

5) Assemble the propeller shaft bearing housing. Refer to “Lower Unit Assembly” (Page 3A-16).

Driveshaft Oil Seal Replacement

CENDK1113106011

1) Remove the driveshaft oil seal housing. Refer to “Lower Unit Disassembly” (Page 3A-8).
2) Using special tool, remove two oil seals out of the driveshaft oil seal housing.

NOTICE

Removing the oil seal can cause damage to the seal lips, causing oil to leak.

Do not reuse the oil seal once removed. Always use new one.

Special tool
(A): 09913–50121 (Oil seal remover)

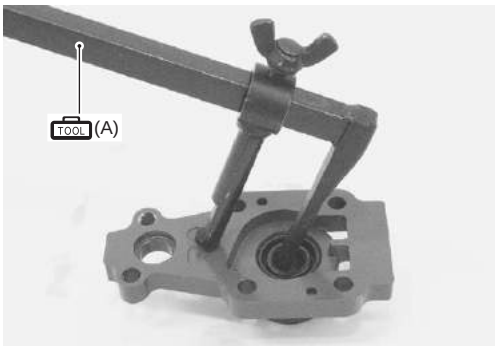

IAJ311310061-01

3) Apply water resistant grease to inner circumference of driveshaft oil seal housing.

: Grease 99000–25350 (SUZUKI Water Resistant Grease EP2 (250 g))

4) Grease the inner lips of oil seal.
With the lips facing away from driveshaft bearing, place seal in position and drive it into the oil seal housing.

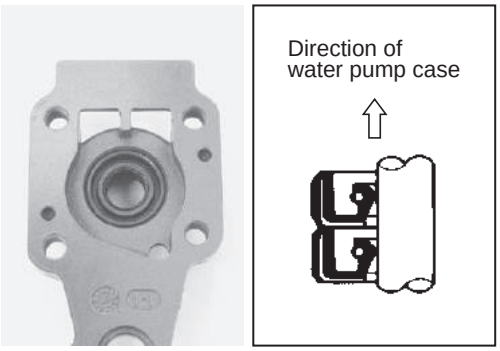

IDK111310015-01

5) Assemble the driveshaft oil seal housing. Refer to “Lower Unit Assembly” (Page 3A-16).

Lower Unit Assembly

CENDK1113106012

Assembly is in reverse order of disassembly with special attention to the following steps.

NOTICE

Failure to correctly adjust the gear position will result in lower unit damage.
Before final assembly of lower unit, be absolutely certain that all gear contact, shim adjustments and tolerances are correct.
(Refer to “Lower Unit Gears - Shimming and Adjustment” (Page 3A-21).)

NOTE

- **Make sure that all parts used in assembly are clean and lubricated.**
- **It is recommended that all seals, gaskets and O-rings be replaced with new on assembly.**
- **After assembly, check parts for tightness and smoothness of operation.**

Forward Gear

Place the forward gear back-up shim (1) in position, then install forward gear (2).

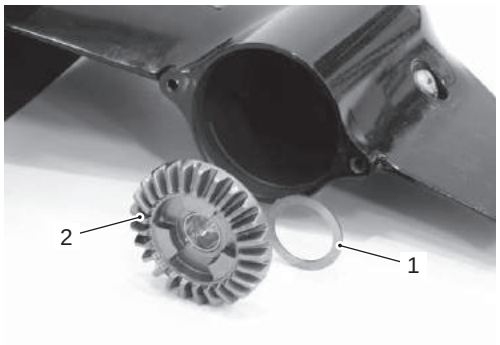

IDK111310012-01

Pinion Gear

1) Apply gear oil to the thrust bearing (1) and pinion gear (2).
2) Assemble the back-up shim (3), thrust washer (I.D. 20 mm) (4), thrust bearing (1), thrust washer (I.D. 21 mm) (5) to the pinion gear (2), then place the pinion gear / washer assembly in gearcase.

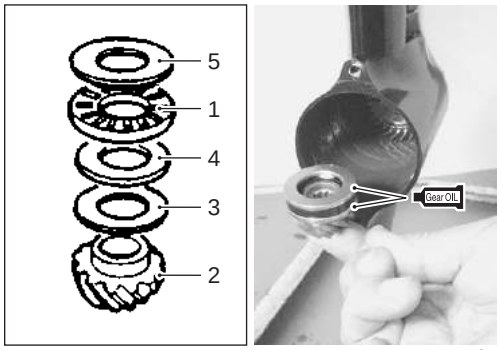

IAJ311310063-02

Driveshaft

Lower the driveshaft assembly (1) down into the gearcase until the bottom of shaft passes to center of pinion gear.

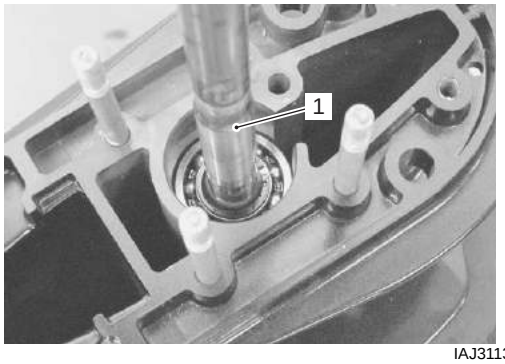

IAJ311310064-01

Shift Cam and Shift Rod

- Attach the shift cam (1) to shift rod (2), then insert pin (3).

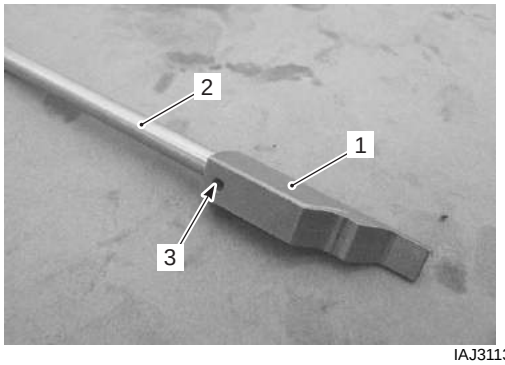

IAJ311310065-01

- Install the pin (4) and washer (5) to shift rod.

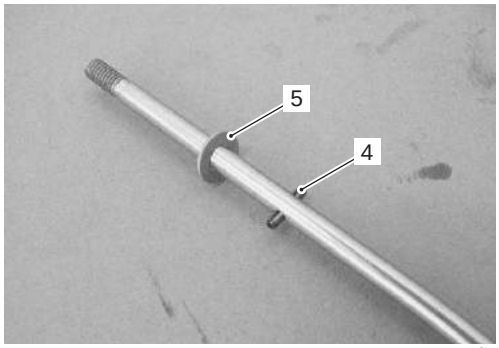

IAJ311310066-01

- Install the shift rod / cam assembly to gearcase.

NOTE

Be sure the stepped section “A” of shift cam faces towards propeller shaft.

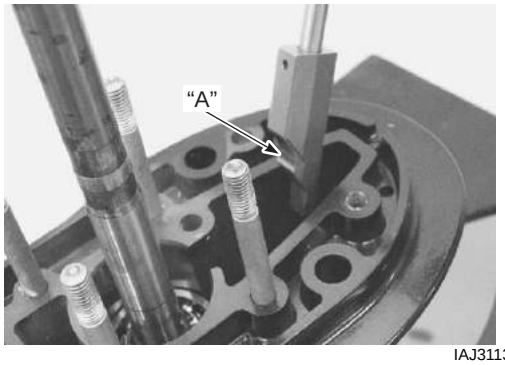

IAJ311310067-01

Driveshaft Oil Seal Housing

- Install the exhaust seal core (1) and seal rubber (2).
- Install the housing gasket (3).

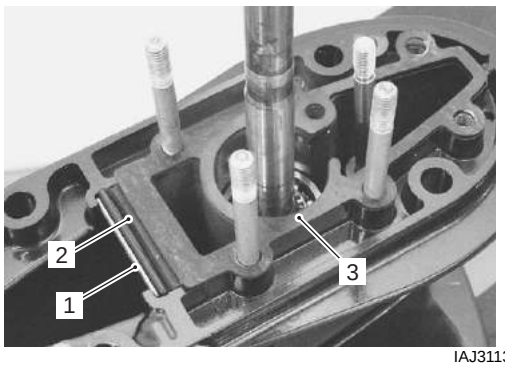

IAJ311310068-01

- Apply water resistant grease to the driveshaft oil seal.

  : Grease 99000–25350 (SUZUKI Water Resistant Grease EP2 (250 g))

IAJ311310069-01

- Install driveshaft oil seal housing on gearcase.

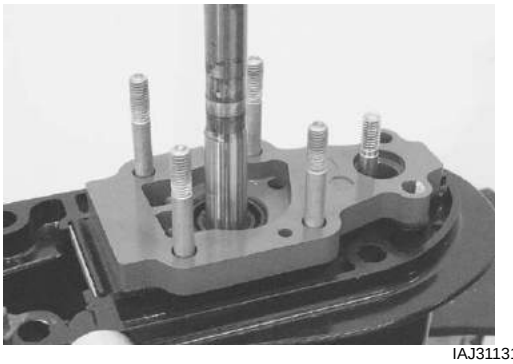

IAJ311310070-01

Shift Rod Guide

- Apply water resistant grease to the shift rod guide O-ring (1) · (2).
- Apply water resistant grease to the shift rod thread area, then install complete shift rod guide (3) to shift rod (4).
- Slide shift rod guide (3) into the driveshaft oil seal housing.

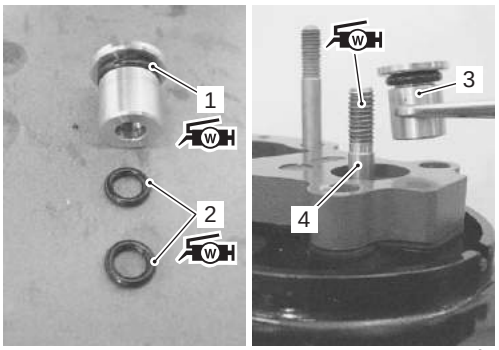

IAJ311310071-02

- Install the dust seal (5).
- Install the shift rod guide stopper (6), then secure it with the bolts (7).

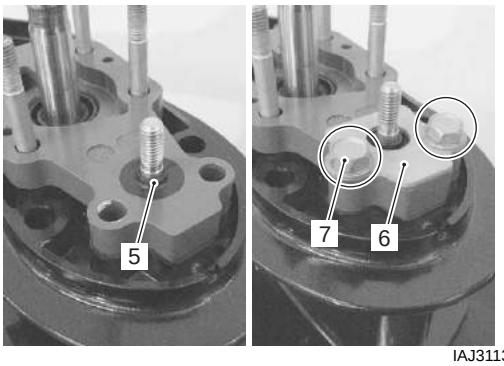

IAJ311310072-01

Checking Gear Backlash

Before installing reverse gear, check the backlash exists between the pinion gear and forward gear.
Refer to “Lower Unit Gears - Shimming and Adjustment” (Page 3A-21).

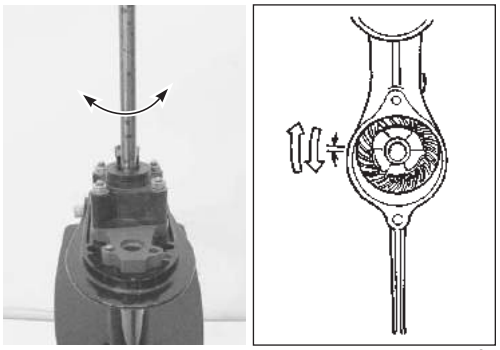

IAJ311310073-01

Propeller Shaft

- Slide the clutch dog shifter (2) onto the propeller shaft (1).

NOTE

The side of the clutch dog shifter marked with the letter “F” must face towards forward gear.

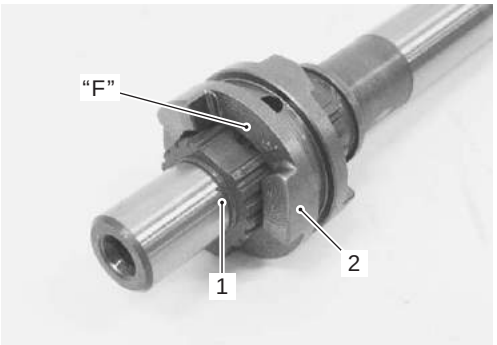

IAJ311310074-01

- Insert the return spring (3) into propeller shaft. Depress the return spring and then slide the dog pin (4) through both dog and propeller shaft as shown in figure.

IAJ311310075-01

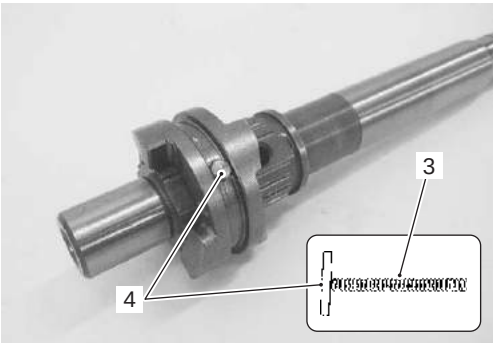

IAJ311310076-01

- Install the dog pin retaining spring (5), ensuring that it fits snugly into the groove on the dog shifter.

IAJ311310077-01

Propeller Shaft / Bearing Housing

- Place the forward thrust washer (1) and reverse thrust washer (2) on the propeller shaft.
- Install back-up shim (3) and reverse gear (4) to propeller shaft bearing housing (5).
- Slide propeller shaft into reverse gear and propeller shaft bearing housing.

: Grease 99000–25350 (SUZUKI Water Resistant Grease EP2 (250 g))
: Gear Oil 99000–22B22 (SUZUKI Outboard Motor Gear Oil)

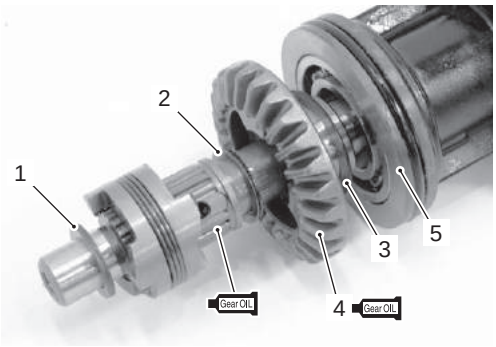

IDK111310013-01

- Apply water resistant grease to the bearing housing O-ring (6).
- Insert the push pin (7) and push rod (8) into propeller shaft.

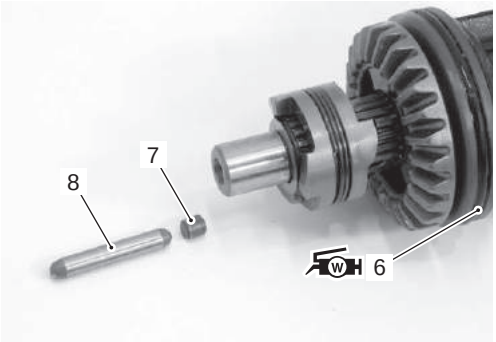

IDK111310014-01

NOTE

Before installing propeller shaft / bearing housing assembly, bring shift cam to the forward position by moving shift rod up or down.

- Install the propeller shaft and housing assembly in the gearcase with the arrow mark “A” of housing toward upside.
- When the housing is fully seated, tighten both retaining bolts to the specified torque.

Tightening torque
Bearing housing bolt (a): 8 N·m (0.8 kgf-m, 5.8 lbf-ft)

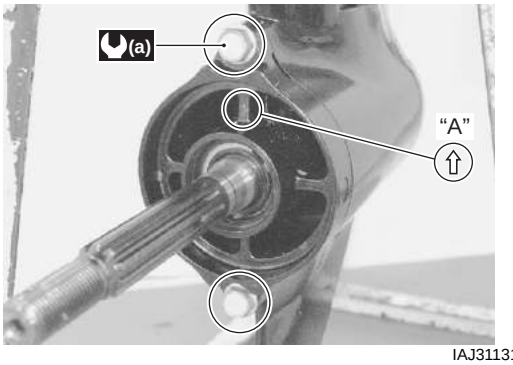

IAJ311310080-01

Rechecking Gear Backlash
Recheck the gear backlash. This should not be less than previously checked. If less, reduce the number / thickness of the reverse gear back-up shims.
Refer to “Lower Unit Gears - Shimming and Adjustment” (Page 3A-21).

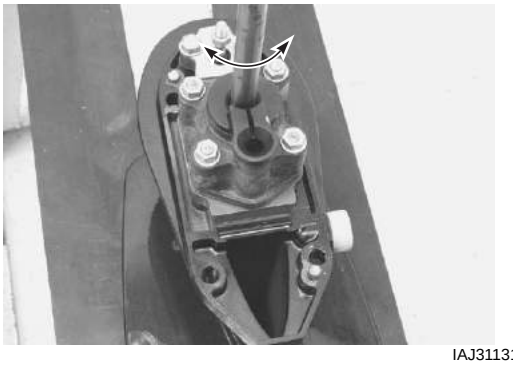

IAJ311310081-02

Checking Propeller Shaft Thrust Play
Check propeller shaft thrust play.
Refer to “Lower Unit Gears - Shimming and Adjustment” (Page 3A-21).

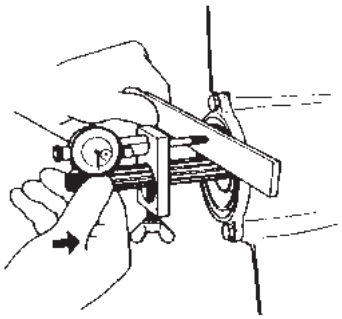

IAJ311310082-01

Leakage Check
Check for leakage of oil seal and O-ring when applying specified pressure inside of the gearcase.

1) Temporarily fasten the driveshaft oil seal housing to gearcase with water pump case and nuts.
   Install the water pump case, then tighten the pump case nuts securely.
2) Install the test tool into the oil level hole.
3) Connect the air pump to the tester.

Special tool
TOOL (A): 09950–69512 (Gearcase oil leakage tester)
TOOL (B): 09950–69710 (Attachment)
TOOL (C): 09952–99320 (Hand air pump)

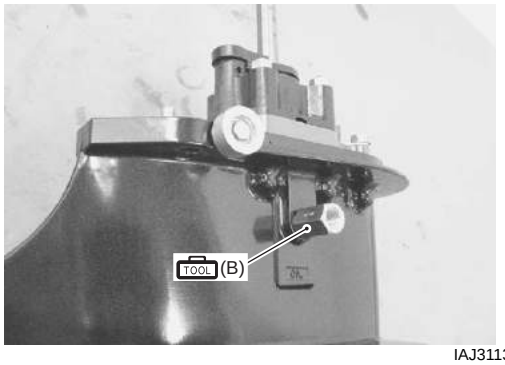

IAJ311310083-01

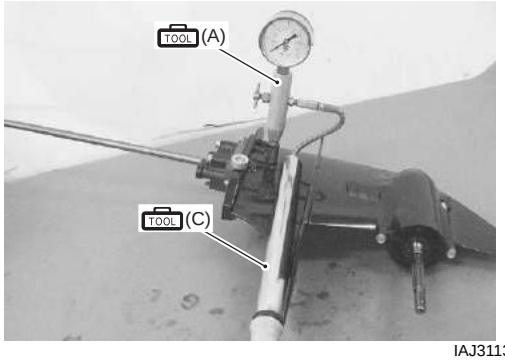

IAJ311310084-01

4) Rotate driveshaft and propeller shaft clockwise several times and then apply specified pressure for the test.

NOTICE

Failure to correctly apply the test pressure will result in oil seal damage.

Do not exceed pressure of 110 kPa (1.1 kg/cm², 15.6 psi.).

<u>Leakage pressure test</u>
100 kPa (1.0 kg/cm², 14.2 psi.)

5) Once stabilized, pressure should remain steady for at least 5 min.
   If pressure does not fall, sealing performance is correct.
6) Remove the water pump case.

Water Pump
Install the water pump and related parts.
Refer to “Lower Unit Removal and Installation” (Page 3A-5) and “Water Pump Removal and Installation” (Page 3A-6).

Propeller
Install the propeller.
Refer to “Propeller Removal and Installation” (Page 3A-4).

Lower Unit
Install the Lower Unit.
Refer to “Lower Unit Removal and Installation” (Page 3A-5).

Lower Unit Gears - Shimming and Adjustment

CENDK1113106013

If the lower unit has been rebuilt or has had components replaced, shimming for the correct gear contact and backlash will have to be checked and/or adjusted to ensure smooth, reliable operation.

Shim / Washer and mounting position

Item	Available thickness (mm)	Design specification thickness (mm)
Pinion gear back up shim	**0.70, 0.80, 0.90, 1.00, 1.10, 1.20, 1.30**	**1.00**
Forward gear back up shim	**0.70, 0.80, 0.90, 1.00, 1.10, 1.20, 1.30**	**1.00**
Forward gear thrust washer	**2.0**	**2.00**
Propeller shaft reverse thrust washer	**1.10, 1.20, 1.30, 1.40, 1.50, 1.60, 1.70, 1.80, 1.90**	**1.50**
Reverse gear back up shim	**0.70, 0.80, 0.90, 1.00, 1.10, 1.20, 1.30**	**1.00**

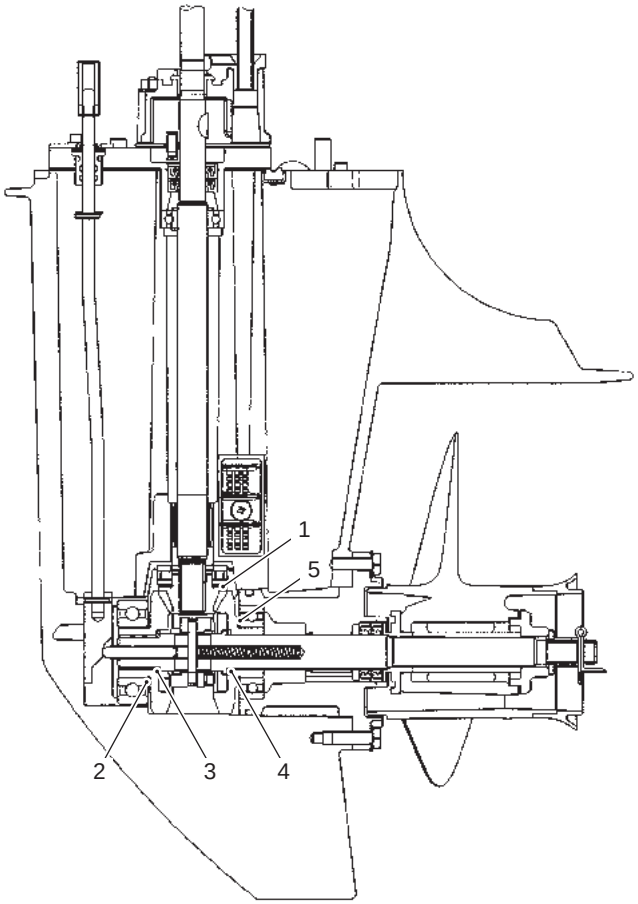

IAJ311310007-02

1. Pinion gear back up shim	3. Forward gear thrust washer	5. Reverse gear back up shim
2. Forward gear back up shim	4. Propeller shaft reverse thrust washer	

Forward Gear / Pinion Gear Back-Up Shim Adjustment

Follow the procedure below to adjust forward gear / pinion gear.

Prior to adjustment

1) Correctly assemble driveshaft oil seal housing, driveshaft, forward gear, pinion gear and related components.
   Do not install reverse gear at this time.
   Refer to “Lower Unit Assembly” (Page 3A-16).

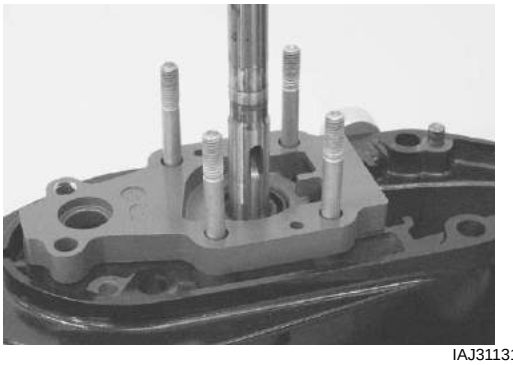

IAJ311310085-01

2) Temporarily fasten the driveshaft oil seal housing to gearcase with water pump case and nuts.
   Install the water pump case, then tighten the pump case nuts securely.
   Do not install water pump impeller at this time.

IAJ311310086-01

Checking gear backlash

Check a slight amount of backlash exists between the pinion gear and forward gear by slightly rotating forward gear or driveshaft by hand.

- If backlash is larger than specified, the forward gear back-up shim thickness must be increased.
- If backlash is smaller than specified, the forward gear back-up shim thickness must be decreased.

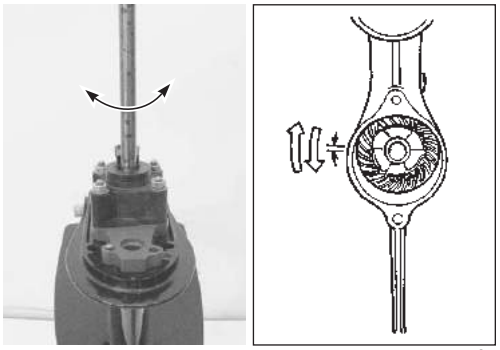

IAJ311310087-01

Checking and adjusting tooth contact pattern (for pinion and forward gear)

Check tooth contact pattern using the following procedure.

Initial checking

1) To assess tooth contact, apply a light coat of Prussian Blue on both sides (drive side and coast side) of the forward gear surface.

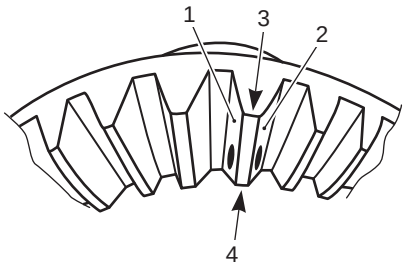

ICJ311310006-01

1. Drive side	3. Heel
2. Coast side	4. Toe

2) Install the propeller shaft and bearing housing assembly (without reverse gear and related internal components).
3) Push the propeller shaft inward and hold it in position.

IAJ311310088-01

4) Rotate the driveshaft clockwise 5 – 6 times by hand, then rotate driveshaft counterclockwise 5 – 6 times in a same way.

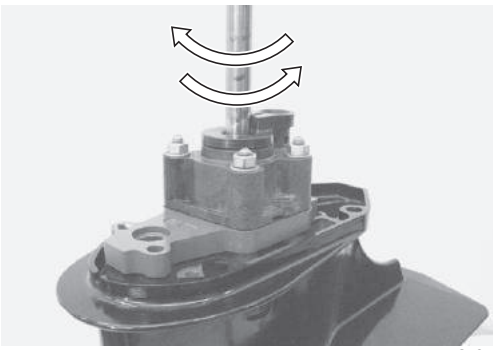

ICJ311310011-01

5) Carefully remove the propeller shaft and the housing to check the tooth contact pattern on forward gear. The tooth contact pattern will appear similar as one of the following three figures.

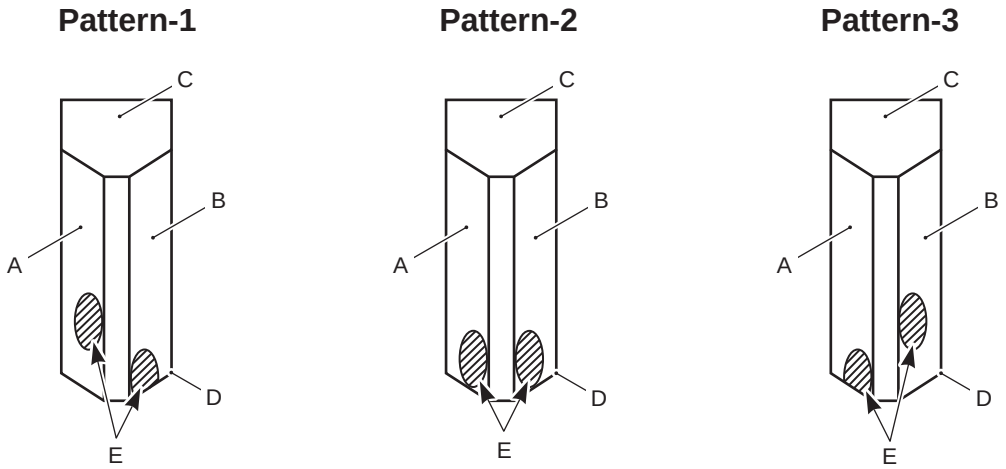

ICJ311310007-02

A. Drive side	C. Heel	E. Tooth contact pattern
B. Coast side	D. Toe	

Optimum tooth contact

Optimum tooth contact is different according to the tooth contact pattern obtained by an initial check.
The optimum tooth contact is shown in the figure below.
A shim adjustment may be necessary to obtain the optimum contact pattern.

NOTE

The gear backlash should be checked when increasing or decreasing shim thickness to adjust tooth contact.

Adjustment for pattern – 1 and 2:

Rotate the driveshaft clockwise and confirm the tooth contact pattern on the drive side surface of forward gear.

Pattern – 1: Optimum tooth contact

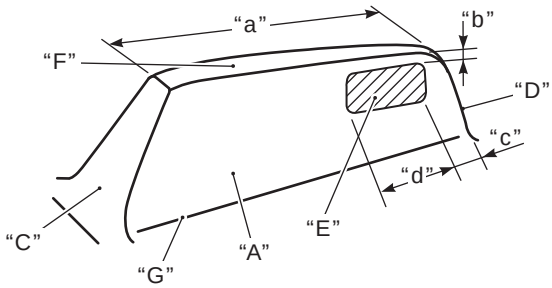

ICJ311310003-03

A: Drive side	G: Tooth bottom
C: Heel	"a": Tooth width
D: Toe	"b": 0.5 – 1.0 mm
E: Tooth contact pattern	"c": 0 – 2 mm
F: Tooth top	"d": Approx. 1/3 of tooth width

Pattern – 2: Optimum tooth contact

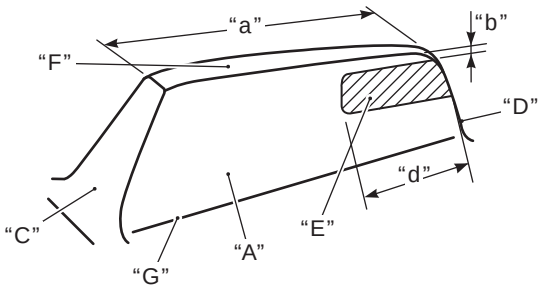

ICJ311310004-02

A: Drive side	G: Tooth bottom
C: Heel	"a": Tooth width
D: Toe	"b": 0.5 – 1.0 mm
E: Tooth contact pattern	"d": Approx. 1/3 of tooth width
F: Tooth top	

Adjustment for pattern –3:

Rotate the driveshaft counterclockwise and confirm the tooth contact pattern on the coast side surface of forward gear.

Pattern – 3: Optimum tooth contact

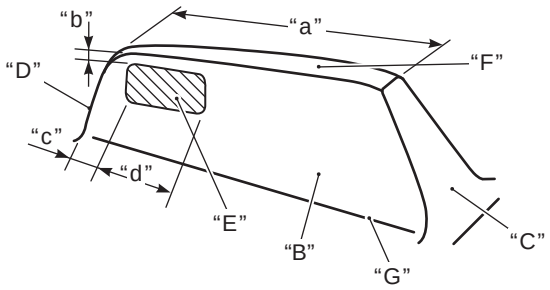

ICJ311310005-04

B: Coast side	G: Tooth bottom
C: Heel	"a": Tooth width
D: Toe	"b": 0.5 – 1.0 mm
E: Tooth contact pattern	"c": 0 – 2 mm
F: Tooth top	"d": Approx. 1/3 of tooth width

Example [A]

Incorrect topside toe contact.
Correction measures.

- Decrease thickness of forward gear shim.
- Slightly increase pinion gear shim thickness.

NOTICE

Setting the tooth contact in the top side toe contact may cause damage and chipping on forward and pinion gears.
Do not set the tooth contact as such top side toe contact.

Example of incorrect contact

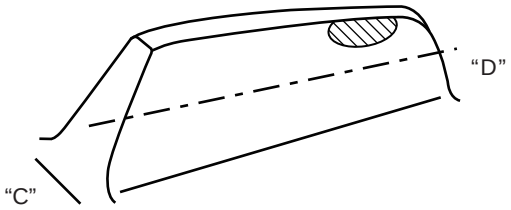

ICJ311310008-02

Example [B]

Incorrect bottom side toe contact.
Correction measures.

- Increase thickness of forward gear shim.
- Slightly decrease pinion gear shim thickness.

NOTICE

Setting the tooth contact in the bottom side toe contact may cause chipping on pinion gear.
Do not set the tooth contact as such bottom side toe contact.

Example of incorrect contact

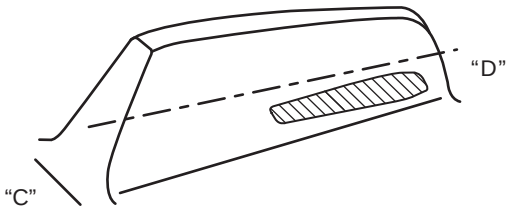

ICJ311310009-02

Reverse Gear Back-Up Shim Adjustment

After adjusting the forward gear tooth contact pattern, follow the procedure below to adjust the reverse gear.

1) Correctly assemble and install reverse gear, propeller shaft, propeller shaft bearing housing and related components.

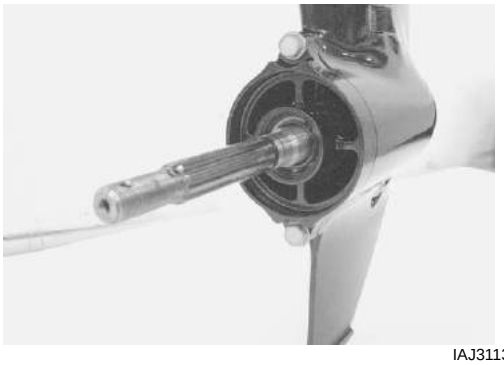

IAJ311310090-01

2) Temporarily fasten the driveshaft oil seal housing to gearcase with water pump case and nuts.
   Install the water pump case, then tighten the pump case nuts securely.
   Do not install water pump impeller at this time.
3) Check the amount of backlash by slightly rotating the driveshaft by hand.
   This should not be less than previously checked.
   Refer to “Checking gear backlash” (Page 3A-22) in “Forward Gear / Pinion Gear Back-Up Shim Adjustment” (Page 3A-22).
   If less, reduce the number / thickness of the reverse gear back-up shims.

IAJ311310091-01

Checking propeller shaft thrust play

After adjusting all gear positions, measure the propeller shaft thrust play. If not within the following specification, a shim adjustment is required.

NOTE

Maintain the forward gear thrust washer at standard thickness (2.0 mm) and use only the propeller shaft reverse thrust washer to adjust thrust play.

<u>Propeller shaft thrust play</u>
Approx. 0.2 – 0.4 mm (0.01 – 0.02 in.)

1) Assemble the lower unit.
   Refer to “Lower Unit Assembly” (Page 3A-16).
2) Temporarily fasten the driveshaft oil seal housing to gearcase with water pump case and nuts.
   Install the water pump case, then tighten the pump case nuts securely.
   Do not install water pump impeller at this time.
3) Assemble the gear adjusting gauge to the propeller shaft.

   Special tool
   TOOL (A): 09951–09530 (Gear adjusting gauge)

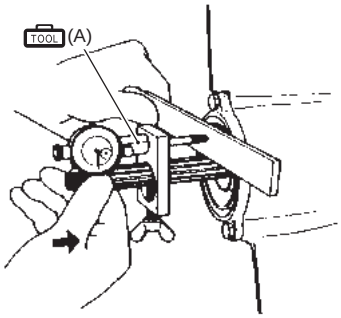

IAJ311310092-02

4) Push propeller shaft inward.
5) Hold the shaft in and set the dial gauge pointer to zero.
6) Slowly pull the shaft outward and read the maximum thrust play on the dial gauge.
   - If the measurement is more than the specification, increase the propeller shaft reverse thrust washer thickness.
   - If the measurement is less than the specification, reduce the propeller shaft reverse thrust washer thickness.

Section 4

Wire / Hose Routing

CONTENTS

Precautions

Precautions

Precautions for Wire / Hose Routing

CENDK1114000001

Refer to “General Precautions” in Section 00 (Page 00-1).

Component Location

Electrical Component Location

CENDK1114003001

Refer to “Wiring Harness Routing Diagram” in Section 4A (Page 4A-3).

Wire Routing

Schematic and Routing Diagram

Wiring Diagram

CENDK1114102001

Refer to “Wire Color Symbols” in Section 0A (Page 0A-2).

DF15A/20A

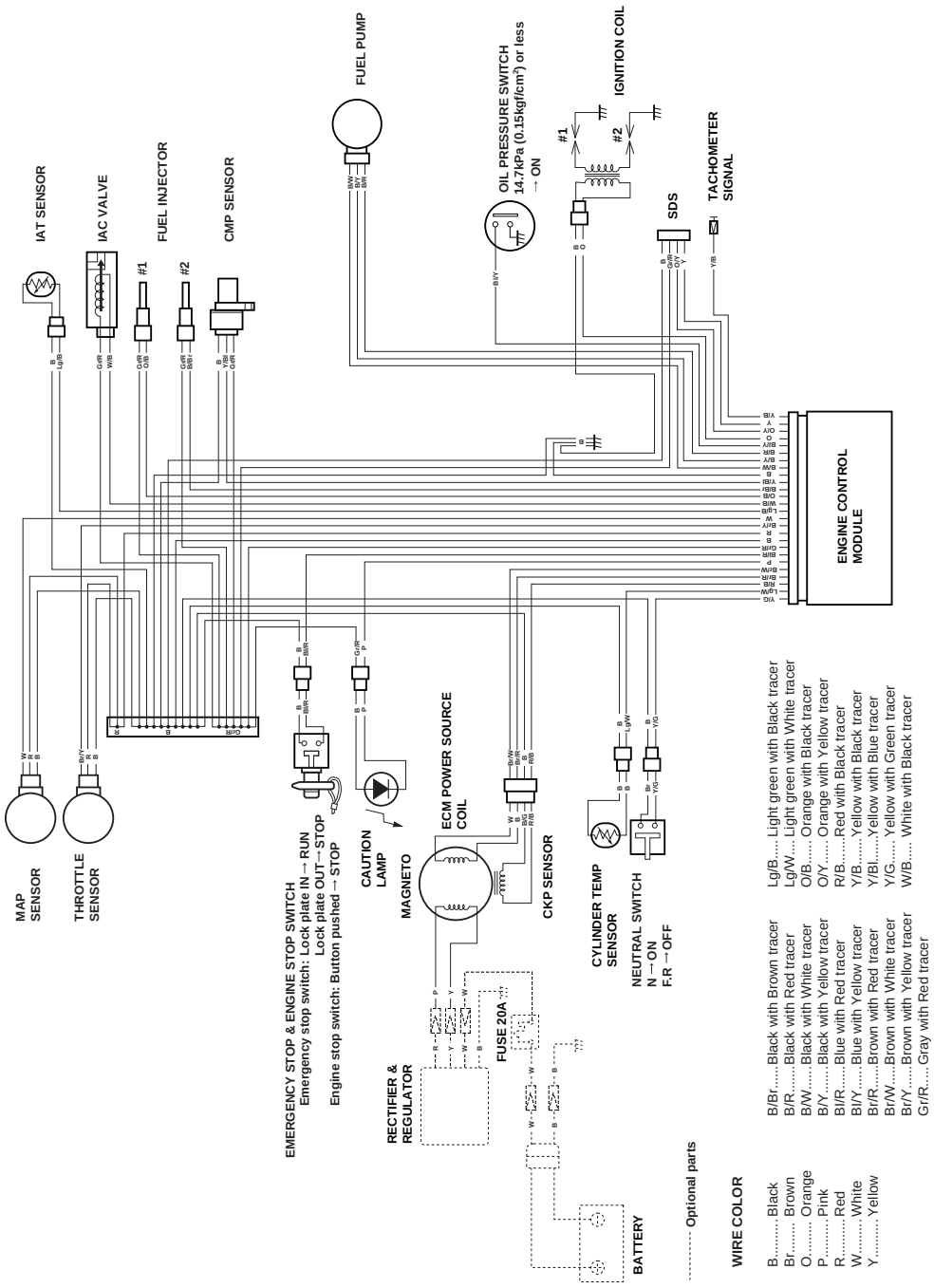

IDK111410001-02

DF15AE/20AE

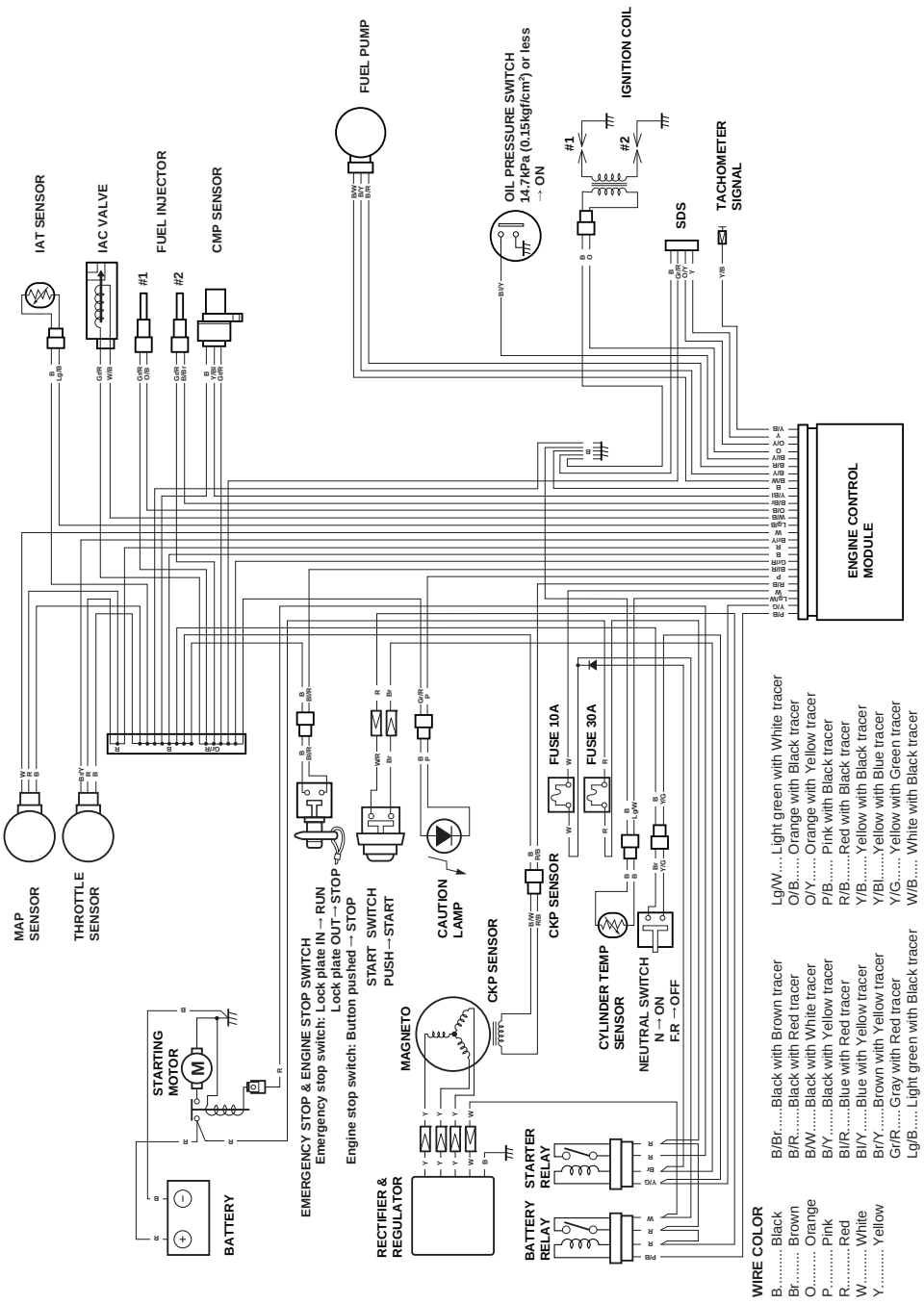

IDK111410002-01

Wiring Harness Routing Diagram

CENDK1114102002

Electric Starting Model

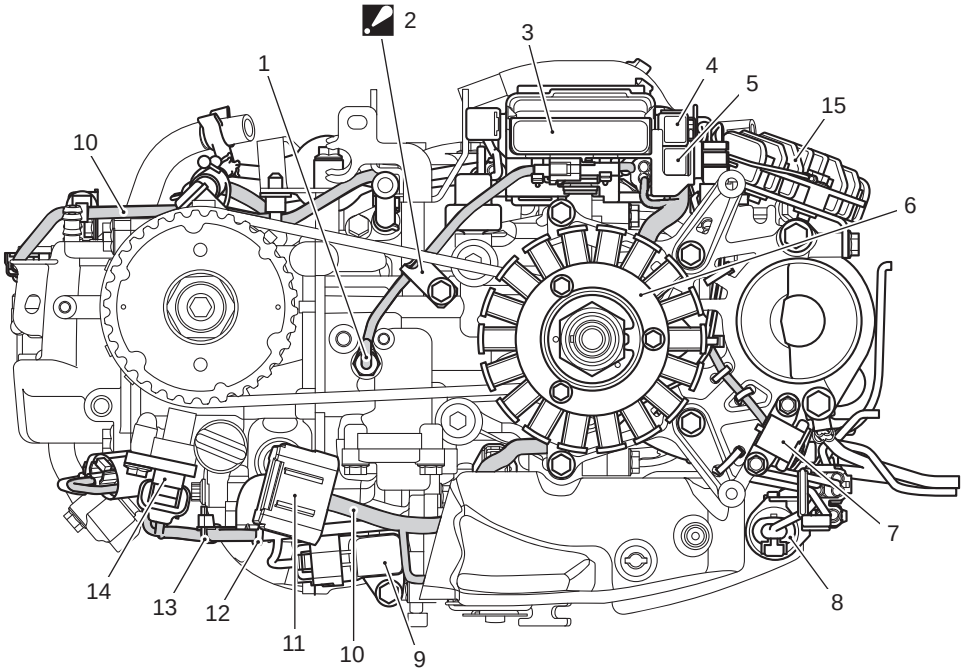

IDK111410003-01

1. Cylinder temp. sensor	6. Battery charge coil	11. Joint connector
2. Clamp : Fix the cylinder temp. sensor lead wire.	7. CKP sensor	12. Cable tie
3. ECM	8. IAT sensor	13. Cable tie
4. Fuse case	9. MAP sensor	14. CMP sensor
5. Fuse case	10. Main harness	15. Rectifier / Regulator

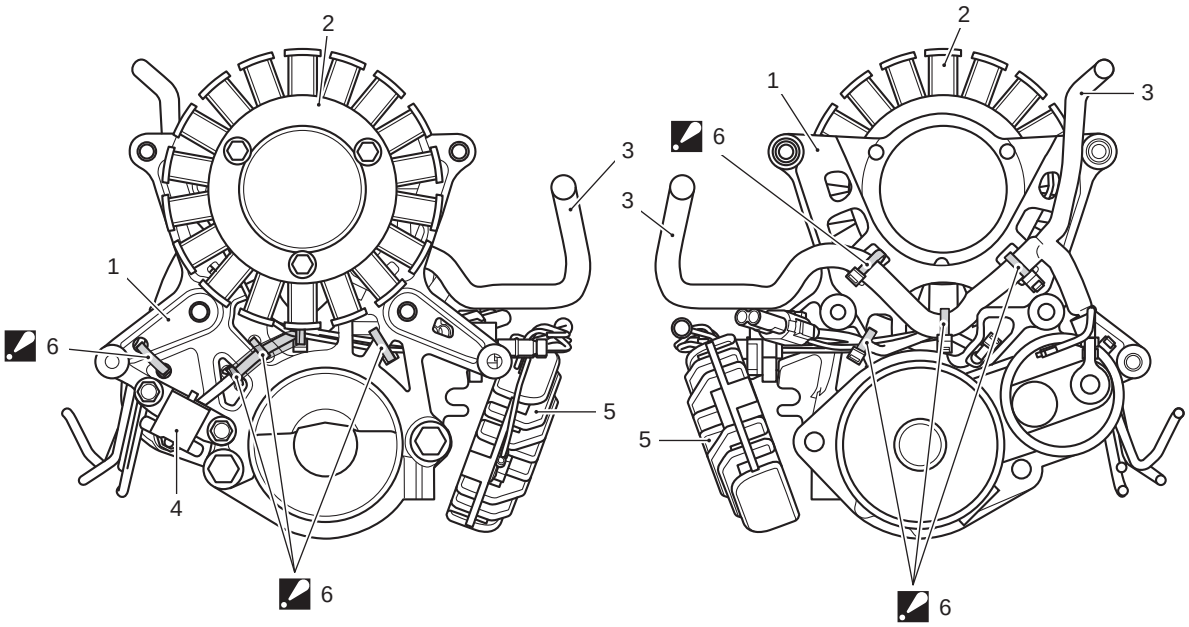

IDK111410004-03

1. Stator base	4. CKP sensor
2. Battery charge coil	5. Rectifier / Regulator
3. Main harness	6. Cable tie: Fix the main harness and lead wire to stator base.

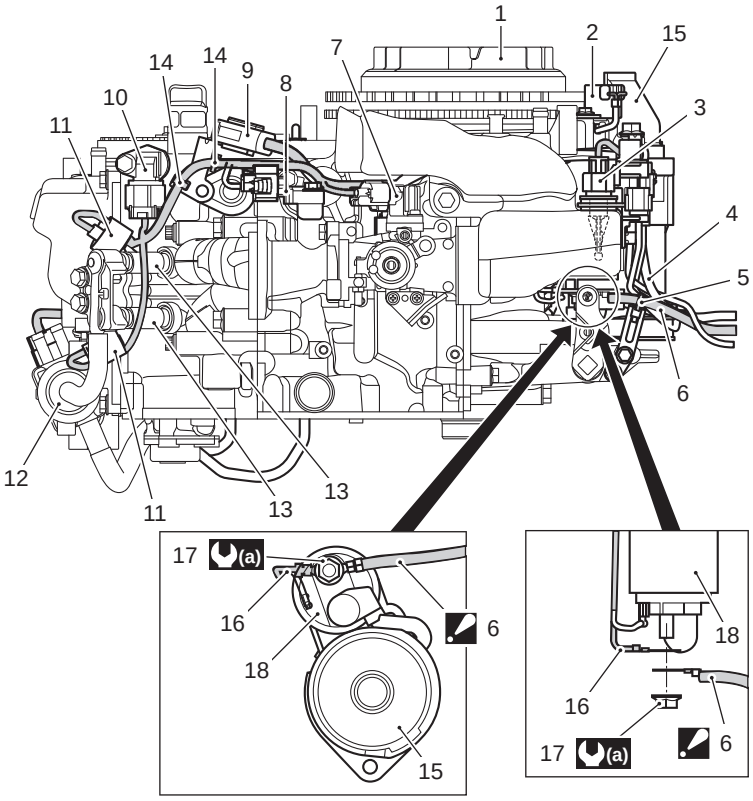

IDK111410005-03

1. Flywheel	6. Battery cable (+) : Position the cable in the location illustrated.	11. Fuel injector connector	16. Harness lead wire (+)
2. CKP sensor	7. IAC valve	12. High pressure fuel pump	17. Nut
3. IAT sensor	8. MAP sensor	13. Fuel injector	18. Starter motor magnetic switch
4. Battery cable (–)	9. Joint connector	14. Cable tie	(a) : 9 N·m (0.9 kgf-m, 6.5 lbf-ft)
5. Clamp	10. CMP sensor	15. Starter motor	

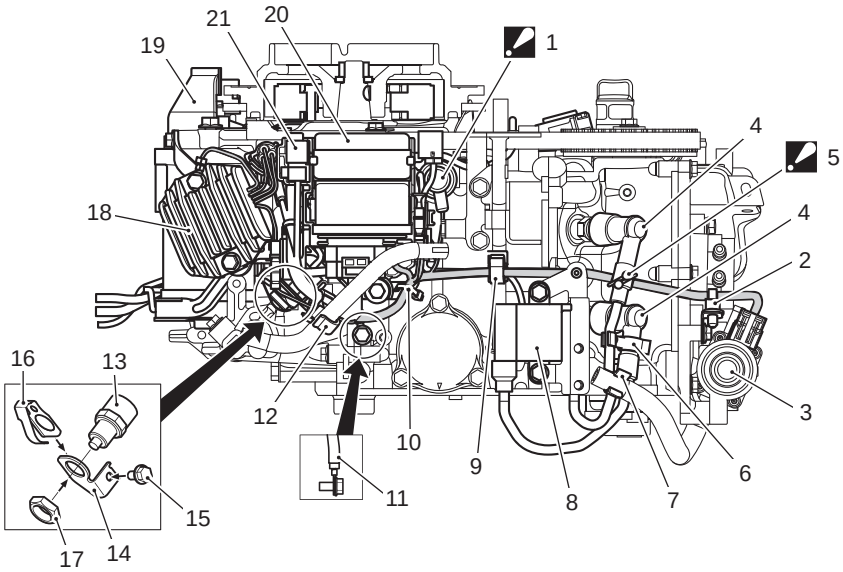

IDK111410006-01

1. Oil pressure switch : Cover the oil pressure switch with cap	7. Clamp	13. Neutral switch	19. Starter motor
2. Harness clamp	8. Ignition coil	14. Bracket	20. ECM
3. High pressure fuel pump	9. Harness clamp	15. Bolt	21. Fuse case
4. Spark plug cap	10. Clamp	16. Actuator	
5. Clamp : Clamp the high-tension cord seal and wiring harness	11. Harness GND lead wire	17. Nut	
6. Clamp	12. Clamp	18. Rectifier / Regulator	

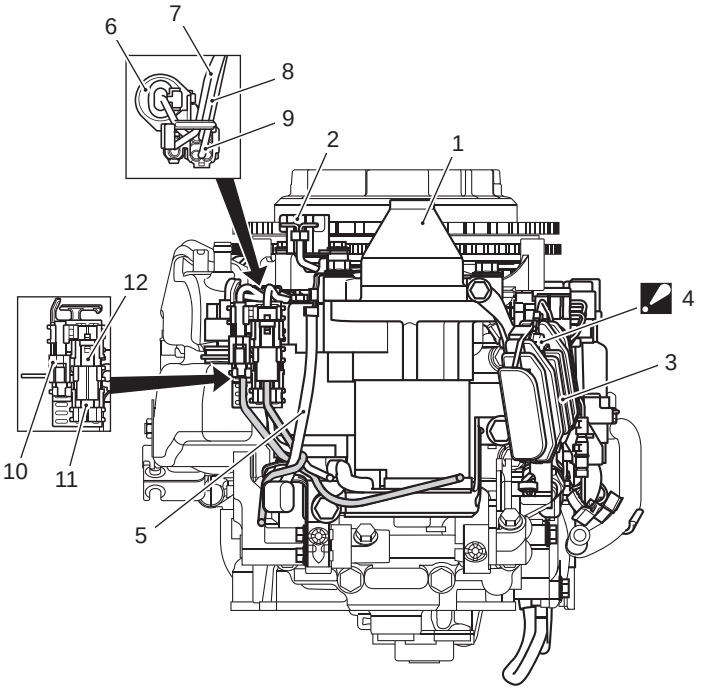

IDK111410007-01

1. Starter motor	4. Bolt : Tighten rectifier GND lead wire with bolt.	7. Caution lamp lead wire	10. Caution lamp lead wire connector
2. CKP sensor	5. Battery cable (–)	8. Starter button lead wire	11. Stop switch lead wire connector
3. Rectifier / Regulator	6. IAT sensor	9. Stop switch lead wire	12. Starter button lead wire connector

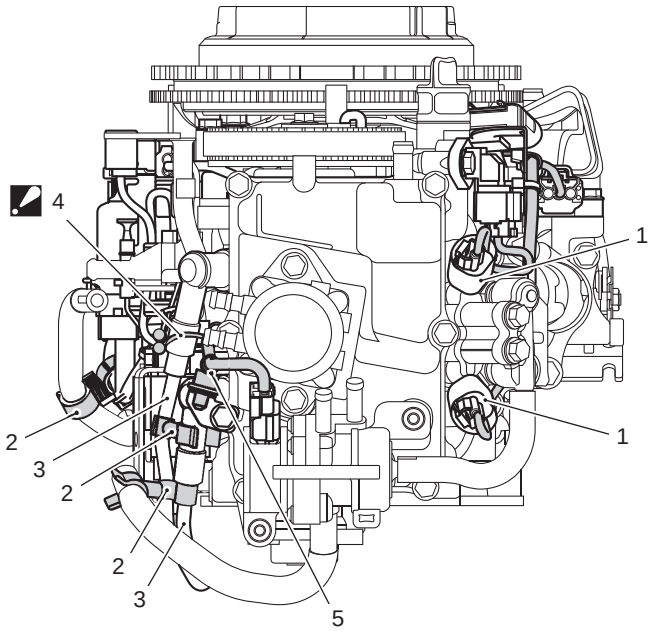

IDK111410008-01

1. Fuel injector connector	3. Ignition high- tension cord	5. Harness clamp
2. Clamp	4. Clamp : Clamp the high-tension cord seal and wiring harness	

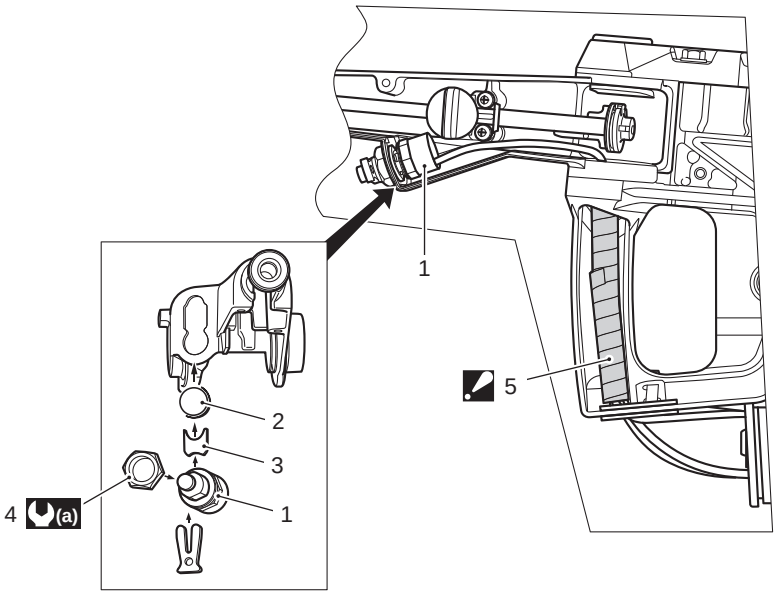

IDK111410009-01

1. Engine stop switch	3. Plate	5. Protector : Wrap the protector around the throttle cable and lead wire.
2. Plug	4. Nut	(a) : 1.8 N·m (0.18 kgf-m, 1.3 lbf-ft)

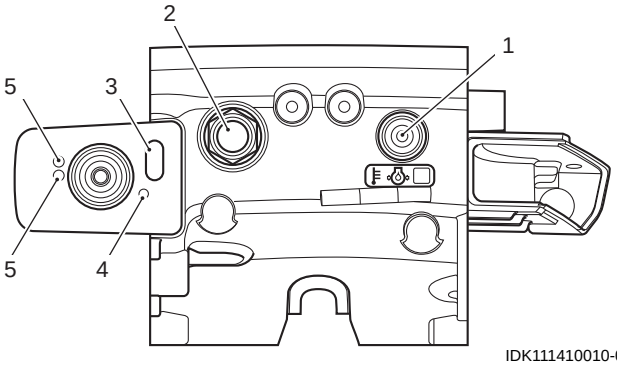

IDK111410010-01

1. Caution lamp	3. Battery cable	5. Throttle cable
2. Starter button	4. Engine stop switch lead wire	

Manual Starting Model

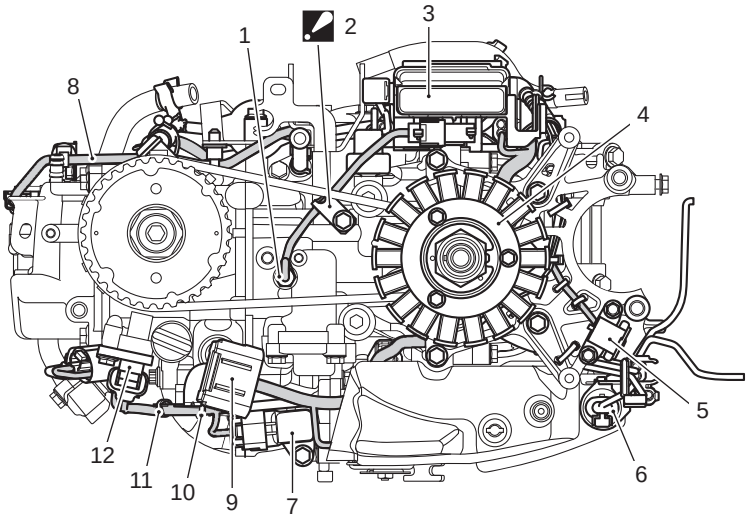

IDK111410011-01

1. Cylinder temp. sensor	4. ECM power source coil and battery charge coil	7. MAP sensor	10. Cable tie
2. Clamp : Fix the cylinder temp. sensor lead wire.	5. CKP sensor	8. Main harness	11. Cable tie
3. ECM	6. IAT sensor	9. Joint connector	12. CMP sensor

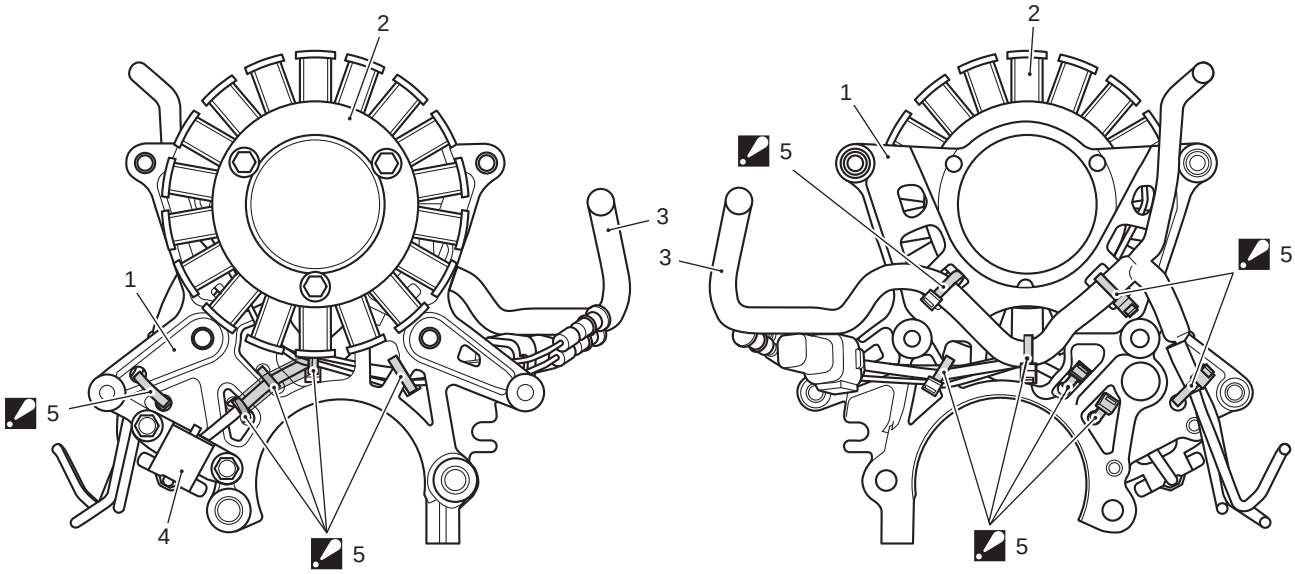

IDK111410012-01

1. Stator base	3. Main harness	5. Cable tie : Fix the main harness and lead wire to stator base.
2. ECM power source coil and battery charge coil	4. CKP sensor	

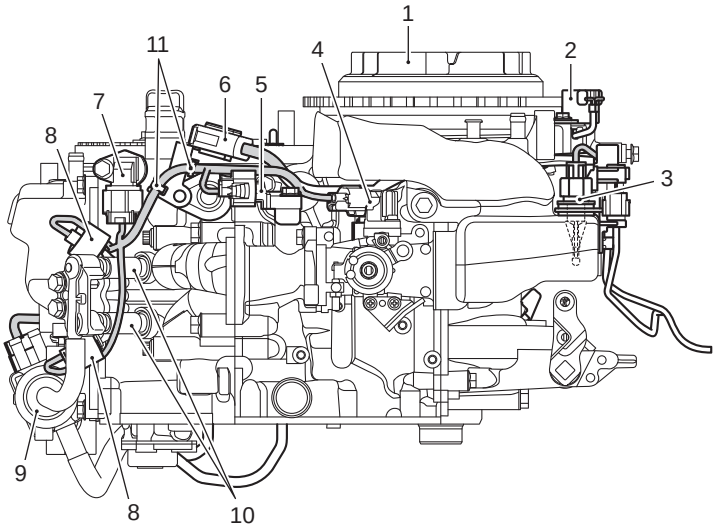

IDK111410013-01

1. Flywheel	4. IAC valve	7. CMP sensor	10. Fuel injector
2. CKP sensor	5. MAP sensor	8. Fuel injector connector	11. Cable tie
3. IAT sensor	6. Joint connector	9. High pressure fuel pump	

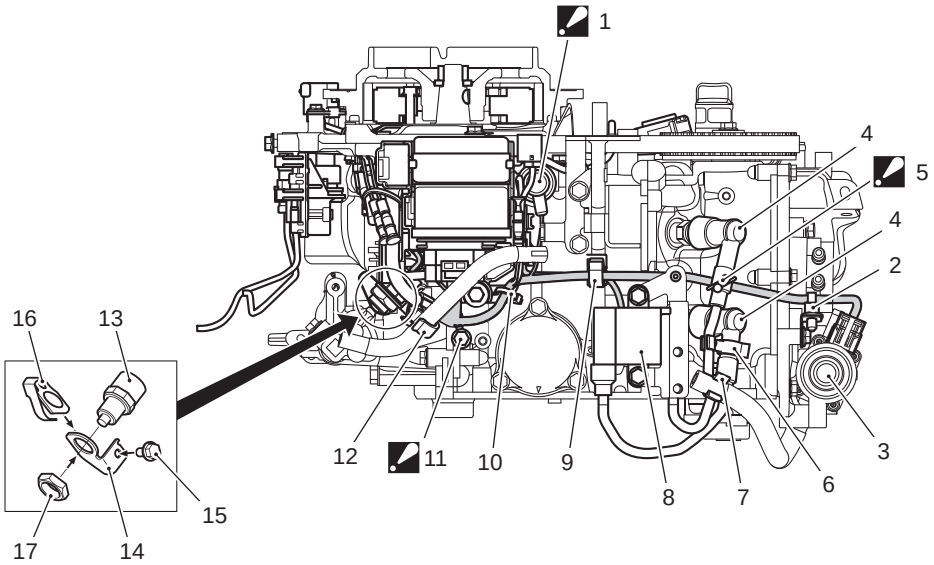

IDK111410014-02

1. Oil pressure switch : Cover the oil pressure switch with cap	7. Clamp	13. Neutral switch
2. Harness clamp	8. Ignition coil	14. Bracket
3. High pressure fuel pump	9. Harness clamp	15. Bolt
4. Spark plug cap	10. Clamp	16. Actuator
5. Clamp : Clamp the high-tension cord seal and wiring harness	11. Bolt : Tighten the harness GND lead wire with bolt	17. Nut
6. Clamp	12. Clamp	

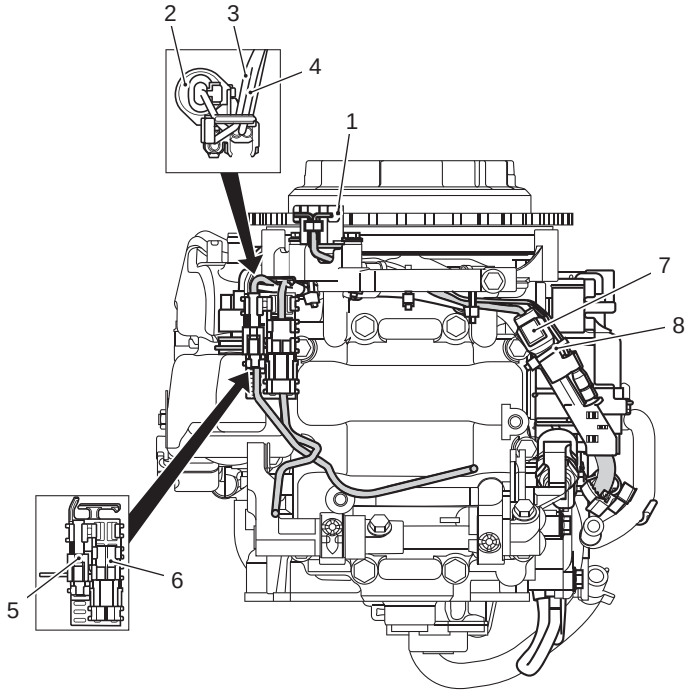

IDK111410015-01

1. CKP sensor	5. Caution lamp lead wire connector
2. IAT sensor	6. Stop switch lead wire connector
3. Caution lamp lead wire	7. CKP sensor / ECM power source lead wire connector
4. Stop switch lead wire	8. Cable tie

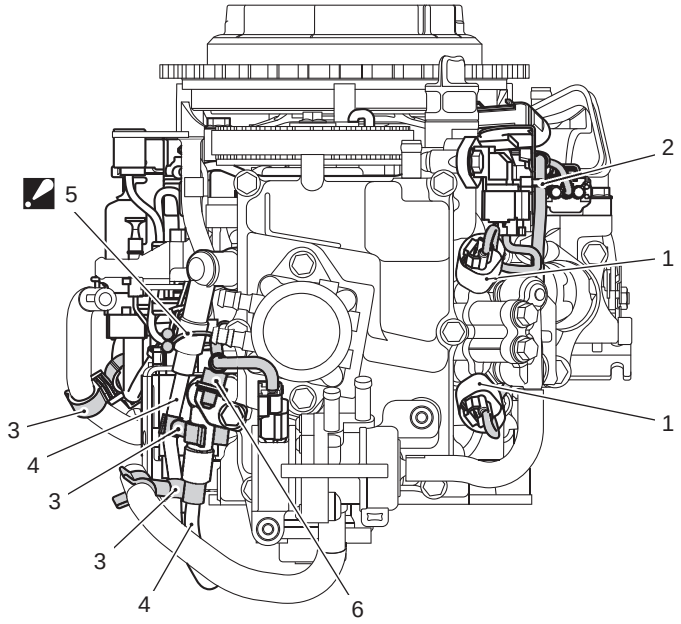

IDK111410016-01

1. Fuel injector connector	4. Ignition high- tension cord
2. Cable tie	5. Clamp : Clamp the high-tension cord seal and wiring harness
3. Clamp	6. Harness clamp

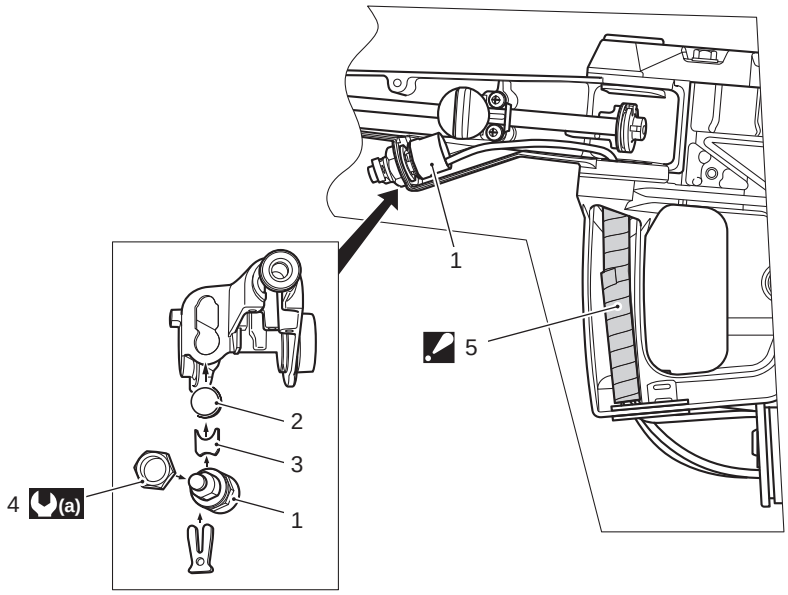

IDK111410017-02

1. Engine stop switch	4. Nut
2. Plug	5. Protector : Wrap the protector around the throttle cable and lead wire.
3. Plate	(a) : 1.8 N·m (0.18 kgf-m, 1.3 lbf-ft)

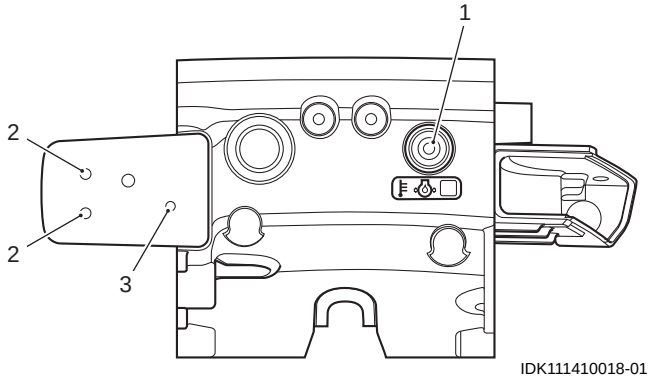

IDK111410018-01

1. Caution lamp	2. Throttle cable	3. Engine stop switch lead wire

Fuel / Water Hose Routing

Precautions

Precautions for Fuel / Water Hose Routing

CENDK1114200001

Refer to “General Precautions” in Section 00 (Page 00-1) and “Precautions on Fuel System Service” in Section 1G (Page 1G-1).

Schematic and Routing Diagram

Fuel Hose Routing

CENDK1114202001

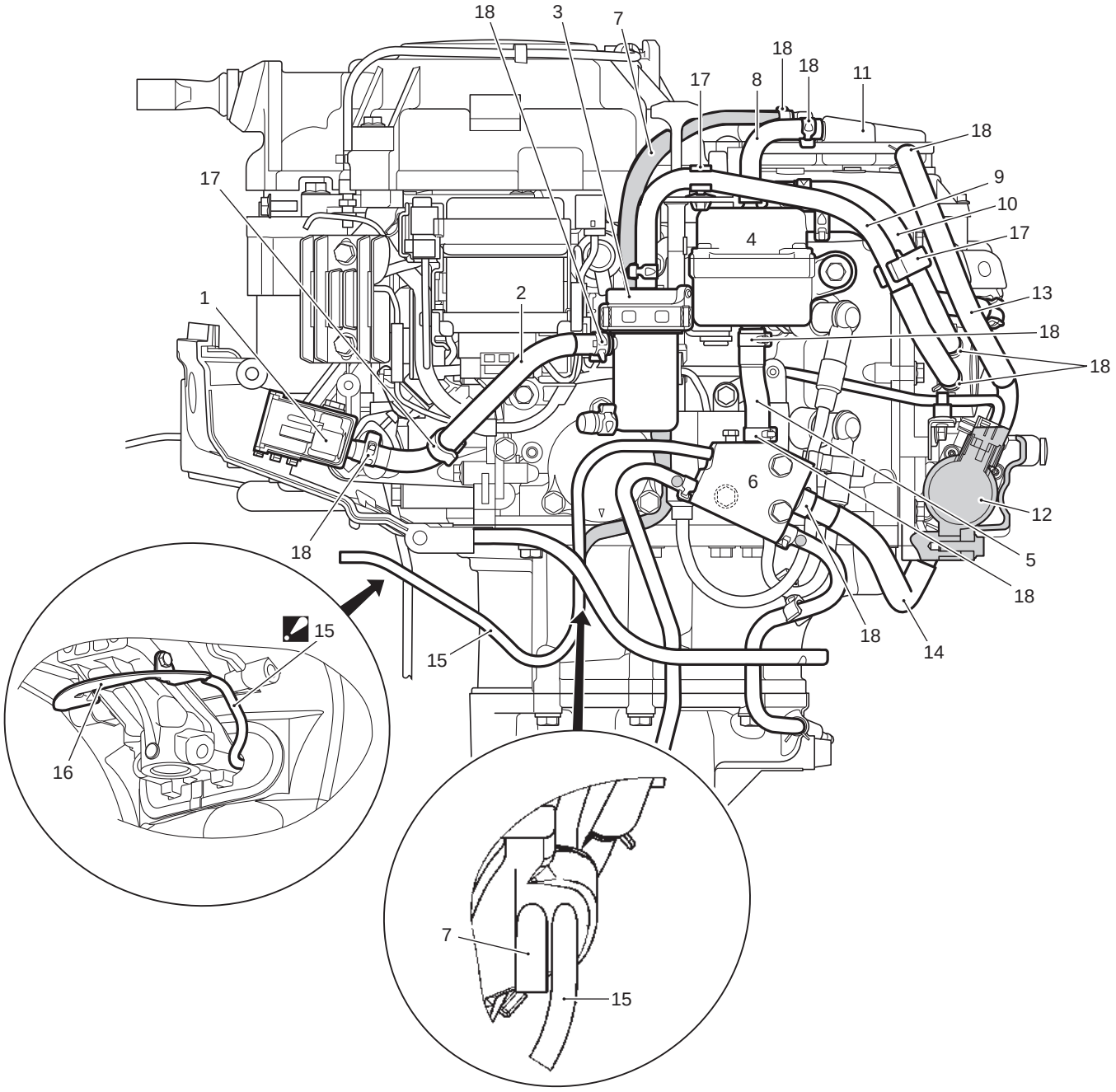

IDK111420001-03

1. Fuel connector	10. Fuel hose (Low pressure fuel pump to fuel vapor separator)
2. Fuel hose (Connector to fuel filter)	11. Evaporation chamber
3. Fuel filter	12. High pressure fuel pump
4. Fuel vapor separator	13. Fuel hose (High pressure fuel pump to evaporation chamber)
5. Fuel hose (Fuel vapor separator to fuel cooler)	14. Fuel hose (Fuel cooler to high pressure fuel pump)
6. Fuel cooler	15. Fuel drain hose : Insert the drain hose end into the steering adjuster plate as shown figure.
7. Evaporation hose	16. Steering adjuster plate
8. Fuel hose (Fuel vapor separator to evaporation chamber)	17. Clamp
9. Fuel hose (Fuel filter to low pressure fuel pump)	18. Clamp (Clip)

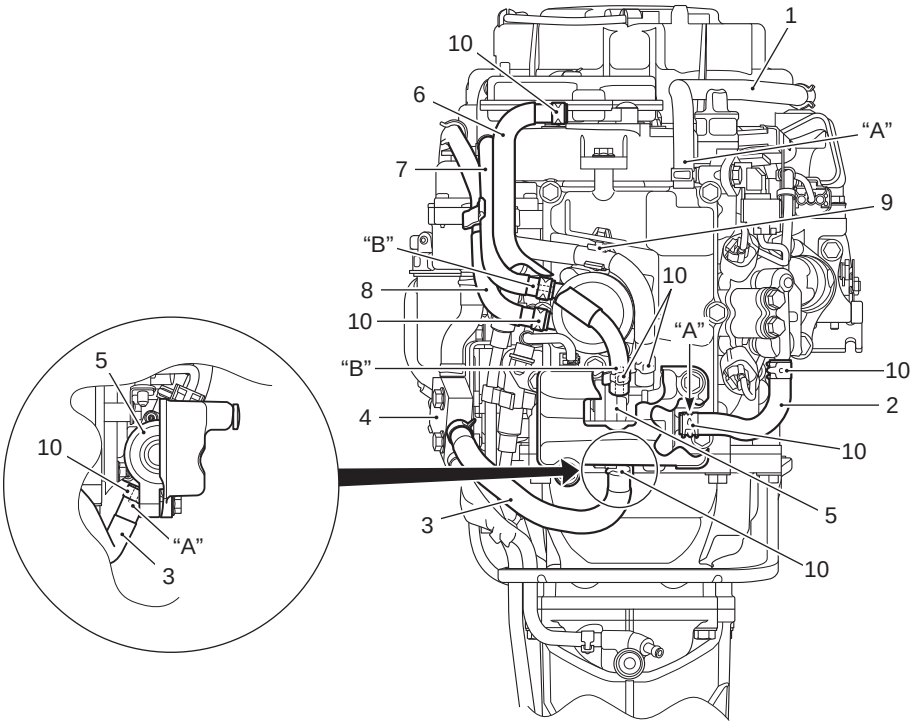

IDK111420002-02

1. Breather hose	7. Fuel hose (Low pressure fuel pump to fuel vapor separator)
2. Fuel hose (High pressure fuel pump to fuel delivery pipe)	8. Fuel hose (Fuel filter to low pressure fuel pump)
3. Fuel hose (Fuel cooler to high pressure fuel pump)	9. Clamp
4. Fuel cooler	10. Clamp (Clip)
5. High pressure fuel pump	"A": White marking
6. Fuel hose (High pressure fuel pump to evaporation chamber)	"B": Yellow marking

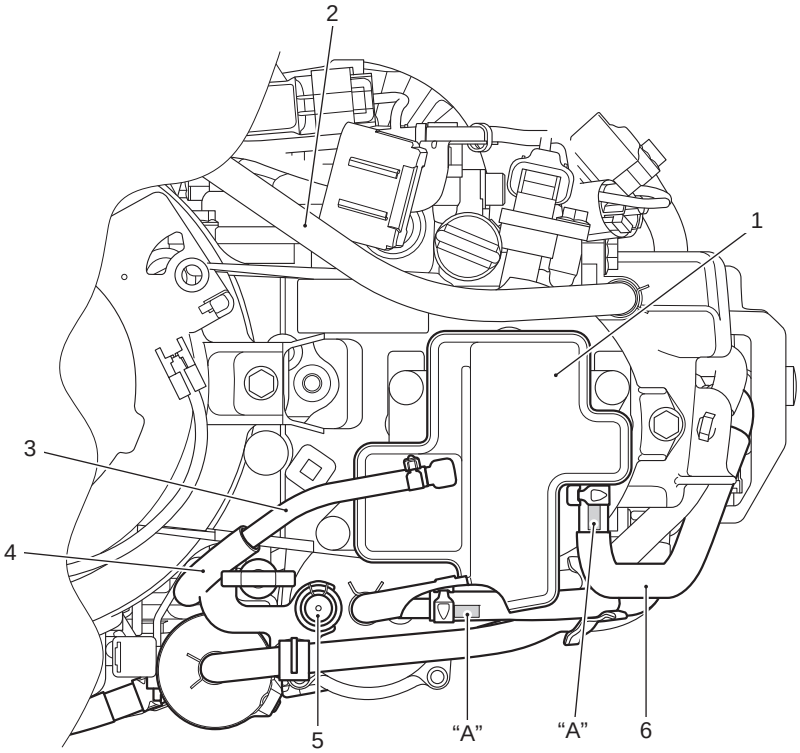

IDK111420003-01

1. Evaporation chamber	4. Hose protector	"A": White marking
2. Breather hose	5. Cap	
3. Evaporation hose	6. Fuel hose (High pressure fuel pump to evaporation chamber)	

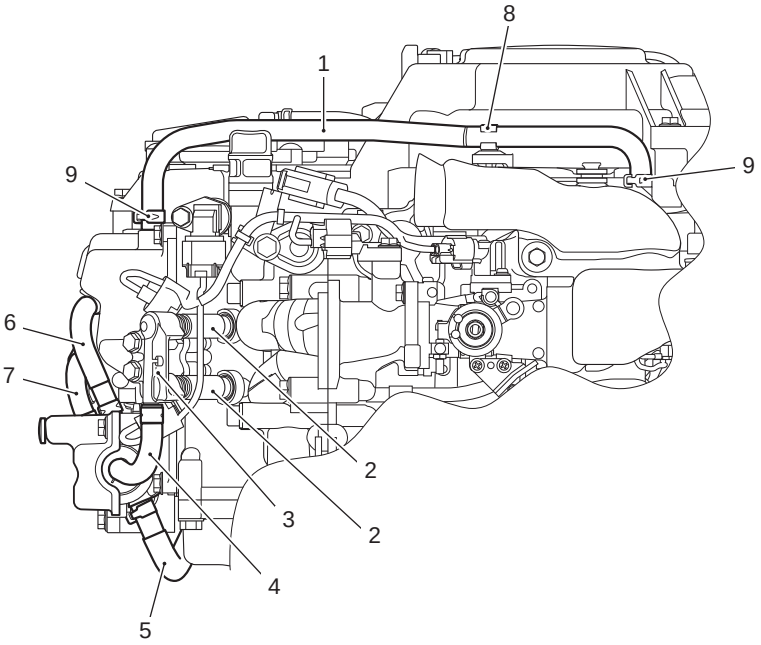

IDK111420004-01

1. Breather hose	4. Fuel hose (High pressure fuel pump to fuel delivery pipe)	7. Fuel hose (High pressure fuel pump to evaporation chamber)
2. Fuel injector	5. Fuel hose (Fuel cooler to high pressure fuel pump)	8. Clamp
3. Fuel delivery pipe	6. Fuel hose (High pressure fuel pump to fuel vapor separator)	9. Clamp (Clip)

Water Hose Routing

CENDK1114202002

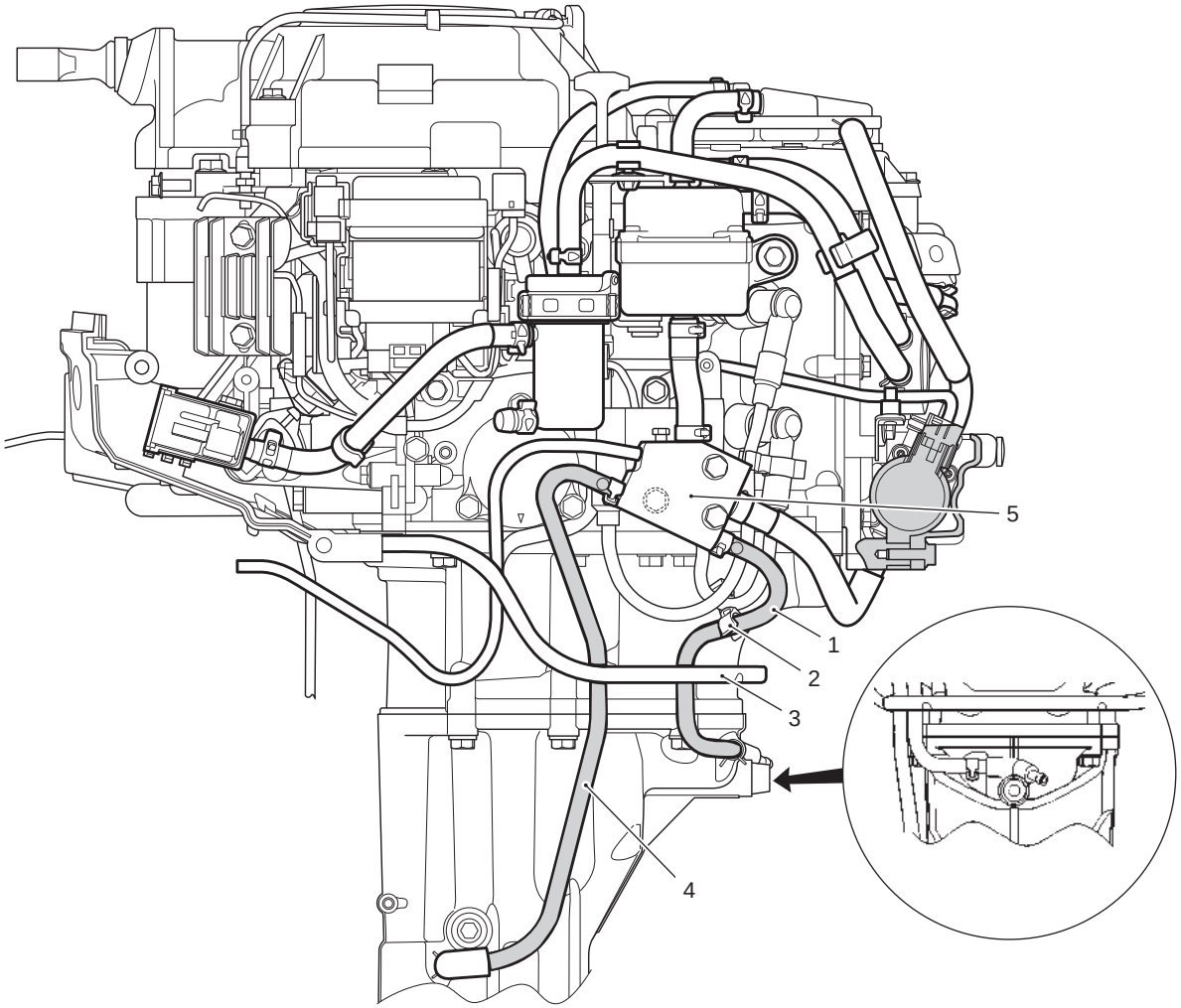

IDK111420005-02

1. Water hose (Fuel cooler to housing)	3. Side cover seal	5. Fuel cooler
2. Clamp	4. Water hose (housing to fuel cooler)	

Prepared by

SUZUKI MOTOR CORPORATION

Marine Design Department

June, 2012
Manual No. 99500-89L00-01E
Printed in Japan

SUZUKI MOTOR CORPORATION

Printed in Japan TK
2013